DOOSAN

Crawler Excavators |

DX300LC-5

STAGE IV COMPLIANT

Maximum power: 271 HP
Operating weight: 30.9 t
Max. bucket capacity: 1.75 m³

Doosan Group – Building your tomorrow today

Be part of the great Doosan family

The Doosan Group – founded in 1896 and headquartered in Seoul, South Korea – is one of the fastest-growing companies in the world:

- With more than 43,100 employees in 34 countries, we are a major player in a variety of industries worldwide
- We are a global leader in the Infrastructure Support Business (ISB), with 56 subsidiaries and 3,700 distributors worldwide
- Dramatic growth over the past decade, with 23% average annual revenue growth since 2000 and rising from €2.4 billion in 1998 to €18.0 billion in 2011

Doosan Group – a top player worldwide

Doosan Engines

- World N° 2 in medium-speed marine diesel engines

Doosan Engineering & Construction

A pioneering leader in construction of residential and public buildings, civil works and industrial facilities.

- World N° 1 chemical process equipment products

Doosan Heavy Industries & Construction

- World N° 1 in desalination plant construction
- World N° 1 in heat recovery steam generator market
- World N° 1 in mould & tool steel
- World N° 3 in crankshafts

Doosan Infracore

- Among the world's Top 5 manufacturers of construction equipment
- World N° 1 in compact loaders
- World N° 1 in attachments
- World N° 1 in portable air compressors

Doosan Infracore Construction Equipment

Creating construction equipment for over 40 years

For over 40 years, we've been building a global production and business network to become one of the world's foremost construction equipment manufacturers.

A solid partner, close to you

A truly global player in every respect, we have large-scale factories, sales subsidiaries and dealers all over the world.

Doosan facilities in Europe

From machine manufacturer... to full solution provider

To ensure the highest trade-in and residual values, our parts and service support professionals maintain the performance, productivity and reliability that you expect of our products throughout their lifetime.

Ask your dealer for a full range of services designed especially for you!

As your local specialist, your dealer ensures that you receive the maximum benefit from our integrated package. Plan ahead to ensure the success of your equipment!

Doosan approved attachments

Genuine parts

Extension of warranty

Financial solutions

Maintenance contract

Telematics

Monitoring systems

Simplicity works when it comes to Doosan's product range...

Articulated Dump Trucks

Special Applications

Wheel Loaders

Wheeled Excavators

Compact Excavators

Crawler Excavators

Raise profits, productivity & fuel efficiency

High productivity & low cost of ownership

Delivers higher productivity & reduced fuel consumption in an efficient & comfortable work environment.

Reliability: Reinforced castings and forged steel pivot points and reinforced heavy-duty arm and boom to withstand high-impact materials.
Large, robust boom and arm cylinders for smooth, powerful operation. Advanced pin & bushing technology.

Safety: Rear camera and large side mirrors, powerful lighting, & anti-slip steps and platforms. Guard rails on upper structure.

Productivity: State-of-the-art bucket and arm digging forces.

Undercarriage durability: Forged steel and deep-hardened top rollers – oil-lubricated rollers – heat-treated sprocket – deep-hardened, heat-treated, grease lubricated & longer life track chains.

Comfort: One of the most spacious cabs in the market, with low noise & vibration levels and excellent all-round visibility. Fully adjustable heated air suspension seat, air conditioning with climate control as standard.

Controllability: Exclusive jog shuttle switch, 4 work & 4 power modes, proportional control, user-friendly 7" TFT LCD colour monitor.

Power: Exceptionally powerful - with high torque at low revs - the Stage IV compliant Scania engines are free from Diesel Particulate Filter (DPF) and associated regeneration system for more fuel efficiency.

Efficient fuel management: This generation of Scania engines uses up to 10% less fuel. A new SPC (Smart Power Control) system, combined with settable engine shut-off, provides an additional reduction of up to 5%.

Easy maintenance: Easy access to all compartments. Radiator and oil cooler separated for better cooling and easier access. Maintenance data directly available from control panel.

Advanced filtration: Highest efficiency filters & cleaners remove water, dust & particles to protect your investment optimally.

Super-long reach and two-piece boom: one long-reach machine – with a reach of 17.5 m – is ideally suited for special applications. A two-piece boom machine configuration is also available for more versatility.

Top performance and fuel efficiency

The power to raise productivity

The DX300LC-5 takes even the heaviest tasks in his stride with efficient, dependable performance that saves you time and money:

- Improved hydraulic system uses the engine power more effectively, maximising pump output and offering more comfort, smoothness and accuracy
- Increased digging power, lifting capacities and traction force combine for performance you can rely on, day after day
- Greater fuel efficiency means you can keep costs down and reduce environmental impact

OPTIMISED POWER MANAGEMENT

The DX300LC-5 is equipped with a Scania engine. Famous for excellent fuel efficiency, reliability and long service life, it combines exceptional power output and high torque at low revs. XPI (extra-high pressure injection) common-rail fuel injection (2400 bar) is combined with a Variable Geometry turbocharger for faster machine response, even at very low speed.

Selective Catalytic Reduction (SCR) technology - combined with a Diesel Oxidation Catalyst (DOC) - ensures compliance with Stage IV regulations. As there is no need for a particulate filter, there is no need for regeneration.

If the engine is the heart of the excavator, the e-EPOS is its brain - providing a perfectly synchronised communication link between the engine's ECU (Electronic Control Unit) and the hydraulic system. A CAN (Controller Area Network) system enables a constant flow of information between engine and hydraulic system, so that power is delivered exactly as needed.

EFFICIENT FUEL MANAGEMENT

- Choice between 4 power modes and 4 working modes guarantees optimum performance in all conditions
- SPC (Smart Power Control): reduces engine RPM during low load demand & ensures pump torque control, thus ensuring fuel efficiency and low emissions
- Engine auto-shut-off: shuts down the engine after the machine has been idling for a specified time
- Electronic control of fuel consumption optimises efficiency
- Auto-idle function saves fuel
- Eco guidance in real time: eco gauge provides information about fuel consumption relative to machine performance in real-time. By trying to keep the right-hand LED bar from rising, the operator can teach himself how to save fuel and work efficiently
- Separate radiator & hydraulic oil cooler assemblies: allows the hydraulically-driven oil cooler's fan speed to be controlled by the electronics in order to maintain the optimum oil temperature and reduce noise & fuel consumption

Variable Geometry turbocharger: Provides optimal air flow to the engine combustion chamber under all speed and load conditions, so that exhaust gas is cleaner and fuel economy is improved.

XPI common-rail fuel injection: Fuel delivery and injection pressure can be set independently of engine speed. This system adapts continually to changing speeds, so that you get the most from every drop of diesel.

Operating in comfort

The ideal workspace – designed around you

The DX300LC-5 is designed to provide you with the best possible working conditions. The pressurised cab is ISO-certified for your safety. Its spacious interior offers a fully adjustable, heated air suspension seat. Comfortably seated, you have easy access to several storage compartments and a clear all-round view of the worksite. Noise and vibration levels have been reduced, while air conditioning and automatic climate control allow you to keep working for hours on end without feeling tired.

Best-in-class operator environment

Doosan Crawler Excavators are powered by industry-leading engines that save on fuel and meet the latest Stage IV European regulations in addition to all noise regulations.

The low levels of cab vibration and noise provide exceptional operator comfort - and the cab air is filtered to ensure a healthy work environment.

Straight travel pedal

For straight machine movement – ensures comfort during on hill operation or front equipment combined movements such as boom/arm or boom/swing.

Two-way proportional pedal

For maximum comfort when operating attachments - operator can easily set his preference in the control panel to operate with the rollers on joystick or with the pedal.

Heated air suspension seat (standard)

In addition to being adjustable and providing lumbar support, the seat has an air suspension system to reduce vibrations. It also features a seat heating system (activated at the touch of a button). A storage box has been placed under the seat for extra convenience.

Air conditioning with climate control

The operator can choose from 5 different modes to regulate the airflow, while the system adjusts the air temperature & fan speed to maintain the operator's selected temperature. A recirculated air function is also available.

MP3/USB radio

MP3 player (MP3/USB radio with CD player optional).

Storage space

The new cab contains 7 storage compartments including one hot/cool box (linked to the HVAC system).

CabSus mount

The cab's new suspension system (CabSus mount) dampens high vibrations and provides outstanding protection against impact. The system absorbs shocks and vibrations much more effectively than a conventional viscous suspension system.

1. Large sun roof
2. Sun visor
3. Storage compartment for sunglasses
4. Window grip
5. Hot/cool box
6. Upper front window is strut-assisted for easy, reliable adjustment and integrates a sun shade
7. Photo sensor detects radiant energy from the sun and adjusts temperature automatically
8. Improved visibility on the bottom right
9. Joysticks and switches are integrated in adjustable control consoles
10. Separate seat height adjustment lever and cushion tilting function
11. Straight ergonomic pedals
12. Flat, spacious, easy-to-clean floor
13. Pedal for auxiliary control 1 & 2 ways
14. Engine emergency stop switch

Total control in all simplicity

The highest standards of efficiency at your fingertips

The advanced & user-friendly technologies are just some of the many advantages of this generation. The ergonomic controls and the easy-to-view colour monitor place the machine firmly in your hands.

- The new multi-function 7" TFT LCD monitor displays a comprehensive range of useful technical information, allowing you to check the machine's status and settings at a glance
- Highly sensitive & low-effort joysticks and clear convenient controls enable you to work safely, smoothly & confidently with minimum effort for increased comfort, efficiency and production
- Doosan's unique jog shuttle switch gives you easy, precise control over all machine functions
- Proportional auxiliary flow means precision control, smoothness & efficiency when using attachments

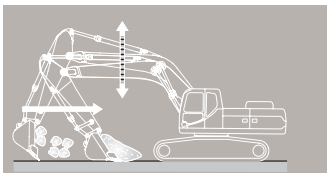

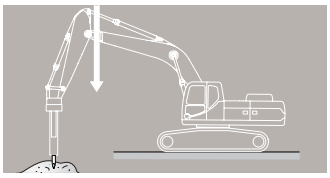

TFT LCD colour monitor panel

The upgraded 7" Thin-Film-Transistor (TFT is a technology that improves image quality) LCD panel features a day and night display. The user-friendly monitor gives full access to machine settings and maintenance data. Any abnormality is clearly displayed on the screen, allowing you to work safely and confidently with an accurate overview of all conditions. All functions are totally controllable, directly via the screen or using the exclusive jog shuttle switch.

1. Fuel consumption level: current, total & daily average fuel consumption
2. Fuel level
3. AdBlue® level
4. Eco symbol: changes colour when operating conditions change (idle, normal or loading)
5. Eco gauge: shows the average fuel efficiency
6. Engine coolant and hydraulic oil temperatures
7. Warning symbols
8. New shortcut menu: displayed on the right for rapid access to main functions
9. Optional anti-theft password-controlled starting
10. Filter oil information
11. Attachment management: stores up to 10 different attachment presets, enabling the operator to set hydraulic flow & pressure according to his needs

Dynamic power management

- Automatic travel speed function
- Activating the power boost control system increases digging force by 10%
- A one-touch deceleration button immediately reduces engine speed to low or idle
- Auto-idling starts 4 seconds after all controls are returned to neutral - decreasing fuel consumption and reducing noise levels in the cab

Intelligent floating boom mode (optional)

The "intelligent floating boom" function allows the boom to move up & down freely according to application:

- Hydraulic breaker setting: during boom down operation the boom moves down freely under its own weight, which reduces vibration, stress on the machine & increases breaker life
- Fully floating mode: during boom down selection the boom is allowed to rise & fall as required while the bucket is drawn across the ground

4 Work modes & 4 Power modes

Deliver the needed power according to your specific application while minimising fuel consumption:

- 1-way mode, 2-way mode, Digging mode and Lifting mode
- Power-plus mode, Power mode, Standard mode, Economy mode

Simple control: Doosan's exclusive jog shuttle switch for easy and precise control over all machine functions.

1. Power Boost switch & One-touch deceleration switch
2. Thumb wheel switch allow proportional control of attachments
3. "Short stroke" joysticks enable easy, precise control of all operations
4. Exclusive jog shuttle switch
5. Automatic travel speed switch
6. Working lights switch
7. Climate control & HVAC
8. Remote control of radio
9. Wipers control
10. Power socket 12V

Your safety: standard cab and boom lights, large side mirrors and rear view camera improve all-round visibility and thus safety. Other standard safety features: anti-slip plates, automatic overheating alarm warning, low oil pressure sensor, engine emergency cut-off switch, auxiliary mode switch (allows a safe level of hydraulics operation in case of EPOS failure), overload warning device. Optional travel/swing alarm and side view camera are also available.

Rear view camera

Work lights

Reliability, the habit of a lifetime

Designed for long-term all-round heavy duty performance

In your profession, you need equipment you can depend on. At Doosan, we use highly specialised design and analysis tools to make sure our machines are as robust and durable as can be. Our materials and structures undergo stringent testing for strength and resilience under the most extreme conditions.

And we continually manufacture the most durable machines to ensure lower cost of ownership.

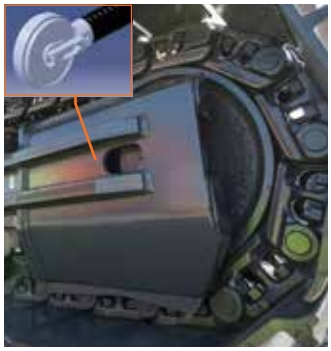

Extra-strong X-chassis

Designed using Finite Element Analysis and 3D computer simulation, the X-shaped undercarriage ensures optimum structural integrity and durability.

Undercarriage durability

- The chain is composed of sealed, self-lubricating links for long-term dependability. For improved protection, alignment and performance, there are 3 types of guard - normal, double or full-length - according to the model
- The track spring and idler are joined for long-lasting performance and easy maintenance
- Cast steel heavy-duty sprockets guarantee the highest resistance
- Track rollers lubricated for life

Strengthened boom & arm

Finite Element Analysis has been used to calculate the best load distribution throughout the boom structure. Combined with thicker material, this means that element fatigue is limited and both reliability and component life are increased.

To better protect the base of the arm, reinforced bars have been added and the arm centre and end boss have been strengthened.

Advanced filtration

- Fuel filters & water separator: a filter-type high-performance water separator effectively captures moisture in the fuel, reducing impurities and helping minimise any fuel-related issues. Pre-filters and dual main filters as standard minimise fuel system failures
- Cyclonic air pre-cleaner: air filter life & engine efficiency are directly related to the amount of debris ingested through the engine's air intake. Therefore, a cyclonic air pre-cleaner (as standard) is the first stage of an air intake system that prevents the majority of heavier-than-air particles from entering. Self-cleaning and maintenance-free, the system is able to expel all types of mixed debris, including mud, snow, rain, leaves, sawdust, chaff, etc

Pin & bushing advanced technology

Highly lubricated metal is used for the boom pivot to increase the component's lifetime and lengthen greasing intervals. The bucket pivot features EM (Enhanced Macrosurface) bushings, which have a tailored surface pattern and self-lubricating coating to optimise greasing and make removal of debris more efficient. Ultra-hard wear-resistant discs & bucket pivot polymer shim increase durability even more.

Track guards: to provide better protection, track alignment, and performance of machine while travelling. 2 guards per track as standard (double and full-length track guards available as options). These various track guard options provide you with optimal solutions for your extreme applications.

Simple maintenance with maximum uptime

Excellent service accessibility

Short maintenance operations at long intervals mean you can depend on your equipment being available on site when it's needed. Our machines are designed for simple routine maintenance, while skilled Doosan technicians are available to provide extra support, should you need it. Choose the package you need from a broad range of service agreements to get the most out of your machine. Uptime, productivity and residual value are all maximised, making these excavators an economical and rewarding choice.

Building further on the success of the Stage IIIB engines, the new Stage IV Scania engine has no need for a DPF filter to meet the Stage IV emissions requirements - which means no maintenance required, so more uptime!

Maintenance access made simple

- Large guard rails are installed along with anti-slip steps and plates, for safer, easier access to the whole upper structure
- The cab's air-conditioning filter is lockable and placed on the side of the cab for easy access
- A battery cut-off switch makes it easy to disconnect the battery during long-term storage
- The hour meter display can be easily checked from ground level
- Shut-off valves have been fitted on the pre-filter piping line and fuel tank drain piping to make servicing easier and prevent pollution from leakage
- Engine parts can be easily reached via the top and side panels
- The radiator and oil cooler have been separated, making access for cleaning easier
- For extra accessibility and servicing convenience, all filters (engine oil filter, fuel pre-filter, fuel filter and pilot filter) are located in the pump compartment

Longer service intervals

More than 99.5% of foreign particles are filtered out in oil return filters and engine oil filters - so the oil & filter change interval is longer.

Global Doosan network

With a network of Doosan dealers & Parts Distribution centres worldwide, your Doosan excavator can be serviced & maintained wherever you are.

Full solution provider

- The Doosan Telematic system is available as standard - offering you all of the features for reading out vehicle operating & production parameters remotely, and providing you with complete peace of mind
- Protection+ : extended warranty covering parts, travel and service (check with your local dealer)
- Maintenance contract: your dealer will support you with routine service at regular intervals
- Genuine parts: manufactured and tested to ensure they always meet the same high quality standards as the original components

SCR Tank

Connected to the ECU, sensors in tank detect low level of AdBlue® & any system malfunction

Centralised greasing points

To make maintenance easier, the greasing points have been centralised.

Battery cut-off switch

Guard rails

SCR Tank

Hour meter
(from ground level)

Technical specifications

Engine

Designed to deliver superior performance and fuel efficiency, the Scania Stage IV diesel engine fully meets the latest emissions regulations. To optimise machine performance, the engine uses high-pressure fuel injectors, air-to-air inter-cooler and electronic engine controls. 4-Cycle Water-Cooled, Variable Geometry Turbocharged, Exhaust Gas Recirculation (EGR) & Selective Catalytic Reduction (SCR) with no Diesel Particulate Filter (DPF).

	DX300LC-5
Model	Scania DC09
No. of cylinders	5
Rated power at 1800 rpm	
(SAE J1995)	202 kW (271 HP)
(SAE J1349)	198 kW (266 HP)
(ISO 9249)	198 kW (270 PS)
Max. torque at 1300 rpm	130 kgf.m (1275 Nm)
Idle (low - high)	800 [±20] - 1850 [±25] rpm
Piston displacement	9300 cm³
Bore × stroke	130 mm × 140 mm
Starter	24 V × 6 kW
Batteries - Alternator	2 × 12 V, 200 Ah - 24 V, 100 A
Air filter	Double element air cleaner and pre-filtered Cyclone Turbo dust separator

Hydraulic system

The e-EPOS (Electronic Power Optimising System) is the brain of the excavator - minimising fuel consumption and enabling the efficiency of the hydraulic system to be optimised for all working conditions.
To harmonise the operation of the engine and the hydraulics, the e-EPOS is connected to the engine's electronic control unit (ECU) via a data transfer link.

- The hydraulic system enables independent or combined operations
- 2 travel speeds offer either increased torque or high speed
- Cross-sensing pump system for fuel savings
- Auto-deceleration system
- 4 operating modes, 4 power modes
- Flow and pressure control of auxiliary hydraulic circuits from control panel
- Computer-aided pump flow control

Pumps & system pressure

	DX300LC-5
Main pumps, type:	2 × variable displacement tandem axial piston pumps
Maximum flow at 1800 rpm	2 × 248 l/min
Pilot pump, type:	Gear pump
Maximum flow at 1800 rpm	27 l/min
Relief valve settings:	
Implement	350 kg/cm²
Travel	350 kg/cm²
Swing	295 kg/cm²
Pilot	40 kg/cm²

Undercarriage

Extremely robust construction throughout - made of high-quality, durable materials, with all welded structures designed to limit stresses.

- Track rollers lubricated for life
- Idlers and sprockets fitted with floating seals
- Track shoes made of induction-hardened alloy with triple grouser
- Heat-treated connecting pins
- Hydraulic track adjuster with shock-absorbing tension mechanism

Number of rollers and track shoes per side

	DX300LC-5
Upper rollers (standard shoe)	2
Lower rollers	9
Number of links & shoes per side	48
Link pitch	216 mm
Overall track length	4940 mm

Hydraulic cylinders

High-strength steel piston rods and cylinder bodies. Shock-absorbing mechanism fitted in all cylinders for shock-free operation and extended piston life.

Cylinders	Quantity	Bore × rod diameter × stroke (mm)
Boom	2	140 × 95 × 1450
Arm	1	150 × 105 × 1670
Bucket	1	135 × 90 × 1150
SLR Bucket	1	95 × 65 × 900

Weight

	Shoe width (mm)	Operating weight (t)	Ground pressure (kPa)
Triple grouser	600 (Std)	30.9	57.86
	700	31.5	51.0
	800	31.8	45.11
	850	32.0	42.17
Double grouser	600	31.6	58.84

Component weights

Item	Unit	Weight	Remarks
Upper structure without front	kg	13568	With counterweight
Lower structure assembly	kg	10958	With narrow track: 10878
Front assembly	kg	6284	Based on standard *
Boom	mm kg	6245 / 6260 two-piece / 10000 SLR 2335 / 2510 / 3035	Including bushing
Arm	mm kg	2500 / 2850 / 3100 / 3750 / 7000 SLR 1110 / 1035 / 1070 / 1190 / 1400	

(*) Standard front – 6245 mm boom, 3100 mm arm, 1.27 m³ GP bucket.

Swing mechanism

The swing mechanism uses an axial piston motor, driving a 2-stage planetary reduction gear bathed in oil for maximum torque.

- Swing bearing: single-row, shear type ball bearing with induction hardened internal gear
- Internal gear and pinion immersed in lubricant

Swing speed & torque

	DX300LC-5
Maximum swing speed	9.9 rpm
Maximum swing torque	12137 kgf/m

Drive

Each track is driven by an independent, high-torque axial piston motor through a planetary reduction gearbox. Two levers / foot pedals guarantee smooth travel with counter-rotation on demand.
The track frame protects the travel motor, brake and planetary gears. The multi-disc track brakes are spring-applied and hydraulic released.

Speed & traction

	DX300LC-5
Travel speed (low - high)	3.0 - 5.2 km/h
Maximum traction	36.9 t
Maximum gradeability	35° / 70%

Fluid capacities

	DX300LC-5
Fuel tank	500 l
Cooling system (radiator)	49 l
Urea (def) tank	70 l
Hydraulic oil tank	280 l
Engine oil	36 l
Swing drive	7.0 l
Travel device	2 × 7.0 l

Cab

The air-conditioning and heating systems are integrated for optimal climate control. An automatically-controlled fan supplies the pressurised and filtered cab air, which is distributed throughout the cab from multiple vents.
The heated air suspension, adjustable operator's seat includes a seat belt. The operator can adjust the ergonomic seat and joystick console separately according to his preferences.

Noise emission

	DX300LC-5
A-weighted emission sound pressure level at the operator's position, LpAd (ISO 6396:2008)	71 dB(A)
A-weighted sound power level, LwAd (2000/14/EC)	Declared : 104 dB(A) Measured : 103 dB(A)

Note – Declared single-number noise emission values are the sum of measured values and the associated uncertainty, and they represent upper boundaries of the range of values which is likely to occur in measurements.

Buckets

Bucket Type	Capacity (m³) SAE	Width (mm)		Weight (kg)	Standard track / narrow track								SLR
					One-piece boom				Two-piece boom				Boom 10.00 m
		With side cutters	W/O side cutters		Arm 2.50 m	Arm 2.85 m	Arm 3.10 m	Arm 3.75 m	Arm 2.50 m	Arm 2.85 m	Arm 3.10 m	Arm 3.75 m	Arm 7.00 m
GP	0.80	1037	962	860	A / A	A / A	A / A	A / A	A / A	A / A	A / A	A / A	-
	1.03	1247	1172	990	A / A	A / A	A / A	A / B	A / A	A / A	A / A	A / B	-
	1.27	1445	1376	1120	A / A	A / B	A / B	A / C	A / B	A / B	A / C	A / D	-
	1.50	1657	1582	1220	A / C	B / C	B / D	C / D	A / C	A / C	C / D	C / -	-
	1.75	1867	1792	1310	B / D	C / D	C / D	D / -	B / D	B / D	C / -	D / -	-
HD	1.07	1134	1068	1080	A / A	A / A	A / A	A / B	A / A	A / A	A / B	A / C	-
	1.27	1286	1220	1180	A / B	A / B	A / C	B / C	A / B	A / B	A / C	A / D	-
	1.46	1424	1358	1250	A / C	A / C	B / D	C / D	A / C	A / C	C / D	B / -	-
Rock	1.16	-	1432	1200	A / A	A / B	A / B	A / C	A / A	A / B	A / B	A / C	-
SLR DC	0.45	-	1500	357	-	-	-	-	-	-	-	-	A
	0.54	-	1800	405	-	-	-	-	-	-	-	-	A
SLR GP	0.64	1167	1083	423	-	-	-	-	-	-	-	-	B

A: Suitable for materials with a density less than or equal to 2100 kg/m³
B: Suitable for materials with a density less than or equal to 1800 kg/m³
C: Suitable for materials with a density less than or equal to 1500 kg/m³
D: Suitable for materials with a density less than or equal to 1200 kg/m³
Based on ISO 10567 and SAE J296, arm length without quick-coupler. For reference only.

Dimensions

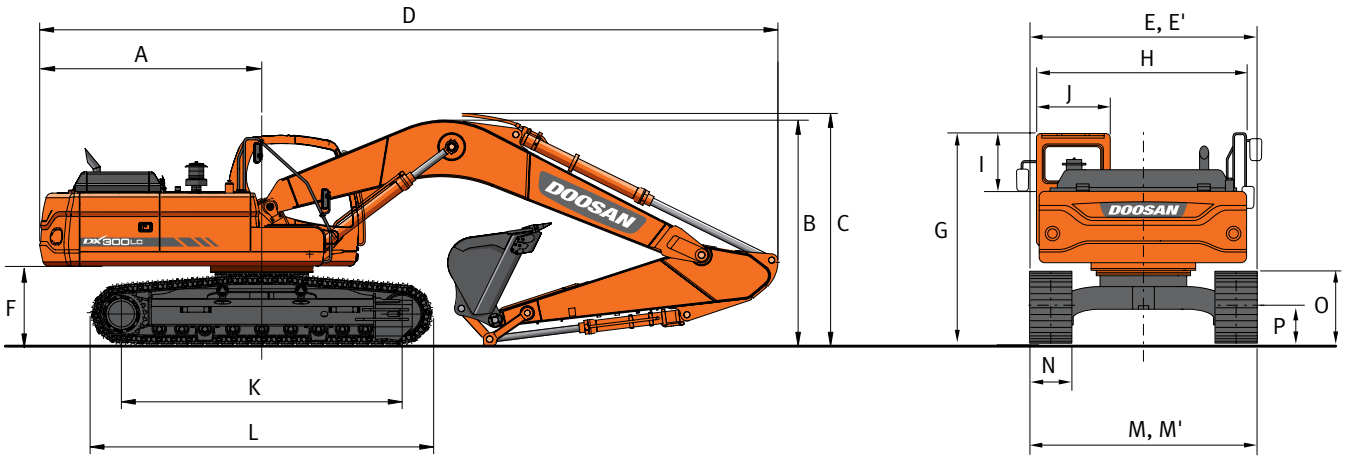

Dimensions

	One-piece boom				Two-piece boom				SLR
Boom length - mm	6245				3250 LB + 3050 UB				10000
Arm length - mm	2500	2850	3100	3750	2500	2850	3100	3750	7000
Bucket capacity - m³	1.51	1.27	1.27	1.03	1.51	1.27	1.27	1.03	0.64
A Tail swing radius - mm	3230	3230	3230	3230	3230	3230	3230	3230	3230
B Shipping height (boom) - mm	3385	3495	3265	3455	3455	3575	3465	3700	3365
C Shipping height (hose) - mm	3495	3615	3370	3575	3455	3575	3465	3700	3475
D Shipping length - mm	10750	10700	10570	10680	10790	10680	10660	10680	14320
E Shipping width std. - mm	3200	3200	3200	3200	3200	3200	3200	3200	3200
E' Shipping width narrow - mm	3000	3000	3000	3000	3000	3000	3000	3000	3000
F Counterweight clearance - mm	1150	1150	1150	1150	1150	1150	1150	1150	1155
G Height over cab - mm	3065	3065	3065	3065	3065	3065	3065	3065	3070
H House width - mm	2960	2960	2960	2960	2960	2960	2960	2960	2960
I Cab height above house - mm	845	845	845	845	845	845	845	845	845
J Cab width - mm	1010	1010	1010	1010	1010	1010	1010	1010	1010
K Tumbler distance - mm	4040	4040	4040	4040	4040	4040	4040	4040	4040
L Track length - mm	4940	4940	4940	4940	4940	4940	4940	4940	4940
M Undercarriage width std - mm	3200	3200	3200	3200	3200	3200	3200	3200	3200
M' Undercarriage width narrow - mm	3000	3000	3000	3000	3000	3000	3000	3000	3000
N Shoe width std. - mm	600	600	600	600	600	600	600	600	800
O Track height - mm	1050	1050	1050	1050	1050	1050	1050	1050	1060
P Ground clearance - mm	500	500	500	500	500	500	500	500	505

Digging forces (ISO)

	One-piece boom				Two-piece boom		SLR
Boom length - mm	6245				3250 LB + 3050 UB		10000
Arm length - mm	2500	3100	3750	2500	3100	3750	7000
Bucket capacity - m³	1.51	1.27	1.03	1.51	1.27	1.03	0.64
BUCKET (Normal/Press. Up) - ton	18.9 / 20.0	18.9 / 20.0	18.9 / 20.0	18.9 / 20.0	18.9 / 20.0	18.9 / 20.0	10.0 / 10.5
ARM (Normal/Press. Up) - ton	16.0 / 17.0	13.2 / 13.9	11.7 / 12.4	16.0 / 17.0	13.2 / 13.9	11.7 / 12.4	7.1 / 7.5

Working range

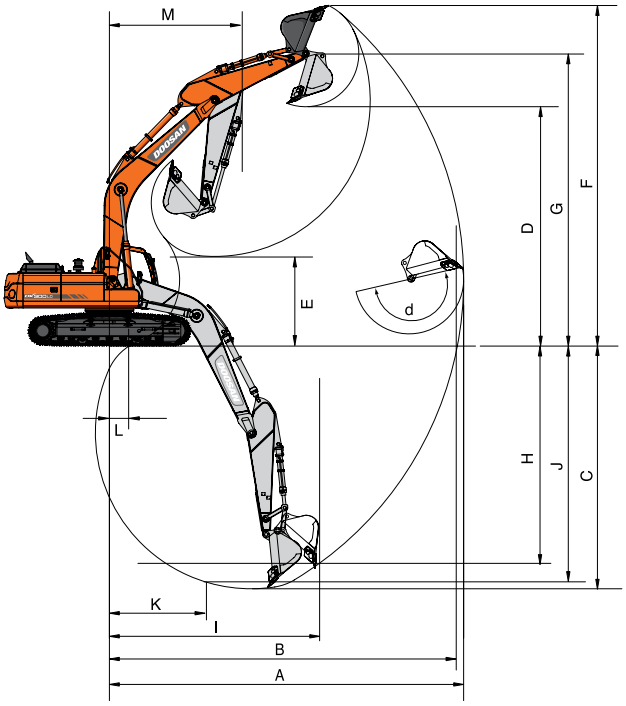

Working range

	One-piece boom				Two-piece boom				SLR
Boom length - mm	6245				3250 LB + 3050 UB				10000
Arm length - mm	2500	2850	3100	3750	2500	2850	3100	3750	7000
Bucket capacity - m³	1.51	1.27	1.27	1.03	1.51	1.27	1.27	1.03	0.64
A Max. digging reach - mm	10155	10415	10725	11240	11280	10555	10860	11415	17510
B Max. digging reach (ground) - mm	9950	10215	10530	11065	10075	10355	10670	11235	17390
C Max. digging depth - mm	6700	7055	7305	7950	6510	6720	7010	7605	13780
D Max. loading height - mm	6990	6995	7280	7395	8415	8575	8895	9255	11975
E Min. loading height - mm	3370	3010	2750	2110	4290	3960	3565	2950	2730
F Max. digging height - mm	10010	9980	10325	10405	11615	11760	12085	12450	14195
G Max. bucket pin height - mm	8585	8695	8880	8990	7970	10170	10495	10855	13290
H Max. vertical wall depth - mm	5395	5450	6125	6600	5915	6720	6650	7135	11590
I Max. radius vertical - mm	6840	7175	6840	7070	6360	6730	6330	6580	10900
J Max. digging depth (8´level) - mm	6465	6815	7110	7755	6295	6615	6905	7515	13395
K Min. radius 8´line - mm	2970	2905	3000	2920	1825	1865	1800	1820	4140
L Min. digging reach - mm	2015	1670	620	-280	1320	2140	1200	-1950	1160
M Min. swing radius - mm	4045	4070	4040	4050	3015	3205	2820	3015	6120
d Bucket angle - °	176	176	175	174	176	176	175	174	169

Doosan Buckets

4 More. More choice - More durable - More strength - More performance!

General Construction Bucket

The General purpose bucket is designed for digging and re-handling soft to medium materials (e.g. materials with low wear characteristics such as top-soil, loam, coal).

Heavy Construction Bucket

The Heavy duty bucket is designed for mass excavations in dense materials such as hard packed clay, shot limestone, limited rock content and gravel.

Severe Mining Bucket

The Severe duty bucket is designed for durability in digging compact materials like loose or blasted rock, hard packed clay and stone.

X-treme Mining Bucket

The X-treme duty bucket is designed as a long-life version of the Severe duty bucket for digging in the most abrasive materials.

Lifting capacities

DX300LC-5

Standard track width: 3200 mm • W/O Bucket

Unit: 1000 kg	A	1.5 m		3.0 m		4.5 m		6.0 m		7.5 m		9.0 m		Max. reach		
	B															
One-piece boom 6.24 m Arm 2.5m Shoe 600 mm Counterweight 5.3 t	7.5 m							7.37 *	7.37 *			7.56 *	7.48	6.54	5.42 *	7.27
	6.0 m							7.70 *	7.70 *	7.57 *	5.92	7.59 *	5.83	7.56	5.17	8.19
	4.5 m					10.87 *	10.87 *	8.77 *	8.17	7.87 *	5.81	7.75 *	5.03	8.19	4.53	8.77
	3.0 m					13.95 *	11.65	10.17 *	7.74	8.53 *	5.61	7.28	4.64	8.50	4.2	9.07
	1.5 m					16.08 *	11.01	11.42 *	7.38	8.64	5.42	7.12	4.5	8.54	4.08	9.10
	0.0 m					16.73 *	10.8	11.88	7.17	8.5	5.29	7.34	4.61	8.31	4.16	8.89
	-1.5 m			12.50 *	12.50 *	16.43 *	10.81	11.82	7.11	8.48	5.27	8.05	5.03	7.79	4.47	8.40
	-3.0 m			20.76 *	20.76 *	15.24 *	10.97	11.51 *	7.21			9.66 *	6.01	6.90	5.18	7.59
	-4.5 m			16.89 *	16.89 *	12.51 *	11.35					10.00 *	8.56	5.47	6.82	6.32
One-piece boom 6.24 m Arm 3.1 m Shoe 600 mm Counterweight 5.3 t	7.5 m													5.42 *	5.42 *	7.27
	6.0 m							6.87 *	6.87 *	6.78 *	6.03			5.21 *	5.17	8.19
	4.5 m					9.55 *	9.55 *	8.00 *	8.00 *	7.27 *	5.87			5.22 *	4.53	8.77
	3.0 m					12.64 *	11.98	9.47 *	7.86	8.02 *	5.65	5.96 *	4.26	5.41 *	4.2	9.07
	1.5 m					15.20 *	11.18	10.88 *	7.44	8.66	5.43	6.58	4.16	5.80 *	4.08	9.10
	0.0 m					16.45 *	10.8	11.87 *	7.17	8.48	5.27			6.46 *	4.16	8.89
	-1.5 m	8.59 *	8.59 *	12.25 *	12.25 *	16.60 *	10.71	11.76	7.05	8.4	5.2			7.15	4.47	8.40
	-3.0 m	13.97 *	13.97 *	18.94 *	18.94 *	15.84 *	10.81	11.79	7.08	8.47	5.26			8.34	5.18	7.59
	-4.5 m			19.23 *	19.23 *	13.86 *	11.09	10.21 *	7.31					9.44 *	6.82	6.32
One-piece boom 6.24 m Arm 3.75 m Shoe 600 mm Counterweight 5.3 t	7.5 m									5.63 *	5.63 *			4.48 *	4.48 *	7.91
	6.0 m									6.00 *	6.00 *			4.36 *	4.36 *	8.78
	4.5 m							7.09 *	7.09 *	6.58 *	5.94	5.68 *	4.39	4.39 *	4.12	9.32
	3.0 m					11.15 *	11.15 *	8.62 *	7.97	7.41 *	5.69	6.71	4.27	4.56 *	3.83	9.59
	1.5 m					14.04 *	11.36	10.17 *	7.5	8.30 *	5.43	6.56	4.13	4.89 *	3.72	9.63
	0.0 m			8.55 *	8.55 *	15.83 *	10.8	11.37 *	7.15	8.45	5.23	6.45	4.03	5.44 *	3.77	9.43
	-1.5 m	8.52 *	8.52 *	12.24 *	12.24 *	16.48 *	10.59	11.67	6.97	8.32	5.11			6.34 *	4	8.97
	-3.0 m	12.58 *	12.58 *	17.17 *	17.17 *	16.18 *	10.6	11.64	6.94	8.31	5.1			7.31	4.53	8.21
	-4.5 m	17.53 *	17.53 *	21.18 *	21.18 *	14.82 *	10.8	11.06 *	7.06					8.96 *	5.68	7.06
	-6.0 m			16.32 *	16.32 *	11.55 *	11.26							9.60 *	8.97	5.26

Narrow track width: 3000 mm • W/O Bucket

Unit: 1000 kg	A	1.5 m		3.0 m		4.5 m		6.0 m		7.5 m		9.0 m		Max. reach		
	B															
One-piece boom 6.24 m Arm 2.5 m Shoe 600 mm Counterweight 5.3 t	7.5 m							7.37 *	7.37 *					7.56 *	7.47	6.54
	6.0 m							7.70 *	7.70 *	7.57 *	5.91			7.59 *	5.82	7.56
	4.5 m					10.87 *	10.87 *	8.77 *	8.16	7.87 *	5.79			7.75 *	5.02	8.19
	3.0 m					13.95 *	11.63	10.17 *	7.73	8.53 *	5.59			7.26	4.62	8.50
	1.5 m					16.08 *	10.98	11.42 *	7.36	8.62	5.41			7.1	4.49	8.54
	0.0 m					16.73 *	10.78	11.85	7.15	8.48	5.28			7.32	4.6	8.31
	-1.5 m			12.50 *	12.50 *	16.43 *	10.78	11.78	7.1	8.46	5.26			8.03	5.02	7.79
	-3.0 m			20.76 *	20.76 *	15.24 *	10.95	11.51 *	7.19					9.66 *	5.99	6.90
	-4.5 m			16.89 *	16.89 *	12.51 *	11.32							10.00 *	8.54	5.47
One-piece boom 6.24 m Arm 3.1 m Shoe 600 mm Counterweight 5.3 t	7.5 m													5.42 *	5.42 *	7.27
	6.0 m							6.87 *	6.87 *	6.78 *	6.02			5.21 *	5.16	8.19
	4.5 m					9.55 *	9.55 *	8.00 *	8.00 *	7.27 *	5.86			5.22 *	4.52	8.77
	3.0 m					12.64 *	11.95	9.47 *	7.84	8.02 *	5.64	5.96 *	4.24	5.41 *	4.19	9.07
	1.5 m					15.20 *	11.15	10.88 *	7.43	8.64	5.42	6.56	4.15	5.80 *	4.07	9.10
	0.0 m					16.45 *	10.78	11.86	7.15	8.46	5.25			6.46 *	4.15	8.89
	-1.5 m	8.59 *	8.59 *	12.25 *	12.25 *	16.60 *	10.69	11.72	7.04	8.38	5.18			7.13	4.46	8.40
	-3.0 m	13.97 *	13.97 *	18.94 *	18.94 *	15.84 *	10.78	11.76	7.07	8.44	5.24			8.31	5.17	7.59
	-4.5 m			19.23 *	19.23 *	13.86 *	11.06	10.21 *	7.29					9.44 *	6.81	6.32

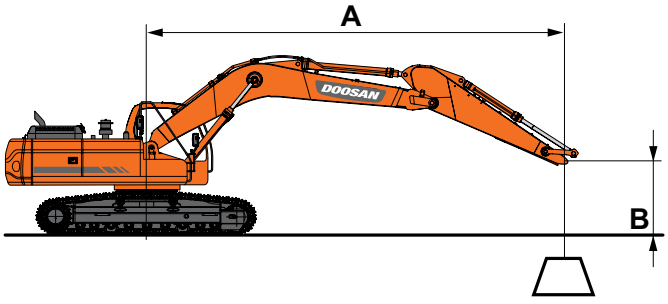

: Rating over front.
: Rating over side or 360°.

1. Lifting capacities are in compliance with ISO 10567:2007(E).
2. The load point is at the end of the arm.
3. * = The nominal loads are based on hydraulic capacity.
4. The nominal loads shown do not exceed 75% of tipping loads or 87% of hydraulic lifting capacity.
5. For lifting capacity with bucket, simply subtract the actual weight of the bucket from the values.
6. The configurations indicated do not necessarily reflect the standard equipment of the machine.

Lifting capacities

DX300LC-5

Narrow track width: 3000 mm • W/O Bucket

Unit: 1000 kg	A	1.5 m		3.0 m		4.5 m		6.0 m		7.5 m		9.0 m		Max. reach		
	B															A
Two-piece boom 6.26 m Arm 3.1 m Shoe 600 mm Counterweight 5.9 t	9.0 m							6.10 *	6.10 *					6.01 *	6.01 *	6.02
	7.5 m							8.34 *	8.34 *					5.32 *	5.32 *	7.43
	6.0 m					8.71 *	8.71 *	9.12 *	9.1	8.16 *	6.33			5.04 *	5.04 *	8.35
	4.5 m					12.91 *	12.91 *	10.26 *	8.71	8.49 *	6.16			4.97 *	4.63	8.92
	3.0 m					15.17 *	12.52	11.28 *	8.23	9.05 *	5.93	6.79 *	4.48	5.08 *	4.31	9.20
	1.5 m					16.47 *	11.7	12.02 *	7.8	9.08	5.7	6.91	4.38	5.35 *	4.21	9.24
	0.0 m					16.29 *	11.33	12.14 *	7.53	8.9	5.54	6.24 *	4.32	5.84 *	4.3	9.03
	-1.5 m			11.06 *	11.06 *	14.94 *	11.28	11.46 *	7.43	8.84	5.48			6.68 *	4.64	8.55
	-3.0 m			15.31 *	15.31 *	12.53 *	11.41	9.78 *	7.48	7.10 *	5.57			6.47 *	5.36	7.75

Standard track width: 3200 mm • W/O Bucket

Unit: 1000 kg	A	1.5 m		3.0 m		4.5 m		6.0 m		7.5 m		9.0 m		Max. reach		
	B															A
Two-piece boom 6.26 m Arm 3.75 m Shoe 600 mm Counterweight 5.9 t	10.5 m					6.73 *	6.73 *							5.96 *	5.96 *	4.82
	9.0 m							6.56 *	6.56 *					4.84 *	4.84 *	6.85
	7.5 m							6.90 *	6.90 *	6.10 *	6.10 *			4.40 *	4.40 *	8.12
	6.0 m							7.33 *	7.33 *	7.12 *	6.46			4.22 *	4.22 *	8.96
	4.5 m			9.82 *	9.82 *	9.45 *	9.45 *	9.04 *	8.91	8.00 *	6.27	6.18 *	4.64	4.20 *	4.20 *	9.49
	3.0 m					14.12 *	12.93	10.70 *	8.39	8.58 *	6	6.88 *	4.52	4.30 *	3.94	9.76
	1.5 m					15.95 *	11.94	11.65 *	7.9	9.14	5.74	6.93	4.38	4.54 *	3.84	9.80
	0.0 m					16.43 *	11.38	12.07 *	7.55	8.91	5.53	6.82	4.28	4.95 *	3.91	9.60
	-1.5 m			11.18 *	11.18 *	15.64 *	11.19	11.76 *	7.37	8.79	5.42	6.78	4.24	5.63 *	4.16	9.15
	-3.0 m			16.22 *	16.22 *	13.75 *	11.24	10.55 *	7.36	8.06 *	5.43			6.43 *	4.7	8.41
	-4.5 m					10.54 *	10.54 *	8.07 *	7.53					5.59 *	5.59 *	7.28

DX300LC-5 SLR

Standard track width: 3200 mm • W/O Bucket

Unit: 1000 kg	A	1.5 m		3.0 m		4.5 m		6.0 m		7.5 m		9.0 m		10.5 m		13.5 m		15.0 m		Max. reach			
	B																					A	
One-piece boom 10.0 m Arm 7.0 m Shoe 600 mm Counterweight 6,3 t	12.0 m																				1.45 *	1.45 *	12.85
	10.5 m															1.86 *	1.86 *				1.39 *	1.39 *	13.90
	9.0 m															2.56 *	2.56 *				1.36 *	1.36 *	14.71
	7.5 m															2.78 *	2.7	1.82 *	1.82 *		1.35 *	1.35 *	15.33
	6.0 m															2.91 *	2.61	2.40 *	2.09		1.36 *	1.36 *	15.79
	4.5 m											3.79 *	3.79 *	3.46 *	3.46 *	3.09 *	2.5	2.82 *	2.02		1.39 *	1.39 *	16.10
	3.0 m					9.29 *	9.29 *	6.51 *	6.51 *	5.16 *	5.16 *	4.37 *	4.37 *	3.87 *	3.63	3.29 *	2.38	3.14 *	1.94		1.43 *	1.43 *	16.26
	1.5 m					6.47 *	6.47 *	7.87 *	7.19	6.02 *	5.4	4.95 *	4.22	4.28 *	3.37	3.51 *	2.25	3.15	1.85		1.50 *	1.50 *	16.28
	0.0 m			3.30 *	3.30 *	5.78 *	5.78 *	8.93 *	6.51	6.76 *	4.93	5.48 *	3.89	4.66 *	3.14	3.62	2.14	3.07	1.78		1.59 *	1.55	16.16
	-1.5 m	3.87 *	3.87 *	4.37 *	4.37 *	6.23 *	6.23 *	9.62 *	6.11	7.34 *	4.6	5.93 *	3.64	5.00 *	2.96	3.52	2.04	3.01	1.72		1.72 *	1.56	15.90
	-3.0 m	4.84 *	4.84 *	5.45 *	5.45 *	7.11 *	7.11 *	10.01 *	5.92	7.72 *	4.4	6.03	3.47	4.88	2.82	3.44	1.97	2.97	1.68		1.89 *	1.6	15.49
	-4.5 m	5.86 *	5.86 *	6.59 *	6.59 *	8.23 *	8.23 *	10.15 *	5.86	7.66	4.31	5.93	3.38	4.8	2.75	3.41	1.94				2.12 *	1.69	14.91
	-6.0 m	6.95 *	6.95 *	7.83 *	7.83 *	9.59 *	9.13	10.07 *	5.9	7.65	4.3	5.9	3.35	4.77	2.72	3.42	1.95				2.44 *	1.84	14.16
	-7.5 m	8.12 *	8.12 *	9.20 *	9.20 *	11.22 *	9.37	9.76 *	6.02	7.73	4.37	5.95	3.4	4.81	2.76						2.95 *	2.07	13.18
	-9.0 m	9.43 *	9.43 *	10.79 *	10.79 *	11.91 *	9.71	9.19 *	6.23	7.41 *	4.51	6.07	3.51	4.92	2.86						3.80 *	2.46	11.94
	-10.5 m			12.68 *	12.68 *	10.53 *	10.18	8.23 *	6.54	6.67 *	4.75	5.47 *	3.71								4.52 *	3.13	10.35
	-12.0 m					8.42 *	8.42 *	6.65 *	6.65 *	5.30 *	5.14										4.74 *	4.61	8.16

Standard and optional equipment

Engine

Scania, Stage IV compliant, SCR, EGR, DOC, water-cooled diesel engine with Variable Turbo Charger and air-to-air intercooler	●
Auto-idle function	●
Auto shut-off	●
No DPF	●

Hydraulic system

Boom and arm flow regeneration	●
Swing anti-rebound valves	●
Spare ports (valve)	●
One-touch power boost function	●
Smart Power Control (SPC)	●
Breaker piping	●
Cylinder cushioning & contamination seals	●
Control of auxiliary hydraulic flow and pressure from the display panel	●

Cab & Interior

Pressurised, sound-insulated and CabSus mounted cab	●
Heated, adjustable air suspension seat with adjustable headrest and armrest	●
Air conditioning with climate control	●
Pull-up type front window with sun roller blind and removable lower front window	●
Sliding left window	●
Intermittent upper and lower windshield wiper	●
Rain visor	●
Rear window defroster switch	●
Adjustable PPC wrist control levers for arm, boom, bucket and swing	●
Joysticks and pedals provide proportional control of auxiliary lines for attachments	●
Travel pedals and hand levers	●
Jog shuttle switch	●
7" (18 cm) TFT LCD colour monitor panel	●
Attachment management system	●
Engine speed (RPM) control dial	
Automatic travel speed	●
4 operating modes & 4 working modes	●
Electric horn	●
Cigarette lighter	●
Ceiling light	●
Cup holder	●
Multiple storage compartments (e.g. document holder under seat)	●
Storage area (tools, etc.)	●
Hot and cool box	●
Flat, spacious, easy-to-clean floor	●
Master key	●
Anti-theft protection	●
12 V spare power socket	●
Serial communication port for laptop PC interface	●
Remote radio ON/OFF switch	●
Loudspeakers and connections for radio	●
MP3/USB radio or MP3/USB radio with CD player	○

Safety

Roll Over Protective Structure (ROPS)	
Boom and arm cylinder safety valves	●
Overload warning device	●
Large guard rails on upper structure and steps	●
Rotating beacon	●
Rear-view camera	●
Punched metal anti-slip plates	●
Hydraulic safety lock lever	●
Safety glass	●
Hammer for emergency escape	●
Right and left rear-view mirrors	●
Lockable fuel cap and covers	●
Battery cut-off switch	●
Engine restart prevention system	●
Parking brake	●
Work lights (2 front frame, 4 front cab-mounted, 2 rear cab-mounted, 2 boom-mounted and 1 rear side)	●
Emergency engine stop switch and hydraulic pump control switch	●
FOGS cab - top and front cab guards (ISO 10262)	○
Front window upper and lower guards	○
Side-view camera	○

Other

Boom: 6245 mm – arm: 3100 mm – counterweight: 5300 kg	●
"CORE TMS" Telematic system	●
Auto shut-off fuel filler pump	●
Double element air cleaner and pre-filtered Cyclone Turbo dust separator	●
Fuel pre-filter with water separator sensor	●
Dust screen for radiator/oil cooler	●
Hydraulically-driven oil cooler fan	●
Self-diagnostic function	●
Alternator (24 V, 100 A) - Battery (2 × 12 V, 200 Ah)	●
Hydrostatic 2-speed travel system with automatic shift	●
Remote greasing for swing circle and work group pivot points	●
Guards for work lights	●
Arms: 2500 mm, 2850 mm, 3100 mm or 3750 mm	○
Booms: one-piece boom 6245 mm or two-piece boom (3245 mm LB + 3050 mm UB)	○
SLR option: boom: 10000 mm – arm: 7000 mm – counterweight: 6300 kg	○
Counterweight two-piece boom: 5900 kg	○
Heavy-duty bottom cover	○
Doosan buckets: full range of GP, HD & Rock buckets	○
Doosan breakers and Doosan quick-couplers	○
Hydraulic piping for crusher, quick-coupler, clamshell, tilting and rotating buckets	○
Additional filter for breaker piping	○
Floating boom	○
Double pump flow	○
Engine coolant heater	○
Oil-washed air cleaner	○
Straight travel pedal (not to be combined with two-piece boom)	○
Bio oil	○
Automatic lubrication system	○
Alarm for travel & swing	○

Undercarriage

Narrow undercarriage	○
Hydraulic track adjuster	●
Normal track guards	●
Double track guards	○
Full-length track guards	○
Greased and sealed track links	●
600 mm triple grouser shoe	●
600 mm double grouser shoe	○
700, 800, 850 mm triple grouser shoe	○

Standard: ●
Optional: ○

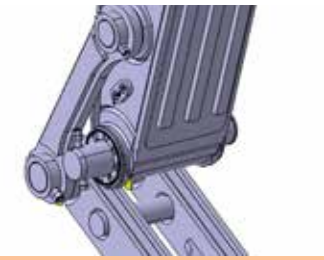

Heavy duty arm & boom

Engine coolant heater

Straight travel pedal

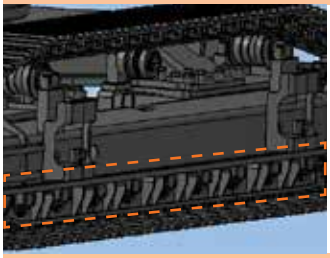

Full-length track guard

Super Long Reach (SLR)

Doosan breakers and quick-couplers

Some of these options may be standard in some markets. Some of these options may not be available for certain markets. Please check with your local DOOSAN dealer for more information about availability or to adapt your machine to your application needs.

"CORE TMS" Doosan Telematic system: is the technology of sending, receiving and storing information via telecommunication devices in conjunction with affecting control on remote objects. It will provide in a dual mode (satellite, GSM) many details about the performances of your equipment such as operation hours, fuel efficiency, GPS, fault code/warning and reports.

Now showing at: www.simplicity-works.eu

www.doosanequipment.eu

DOOSAN

Specifications and design are subject to change without notice. Pictures of Doosan products may show other than standard equipment.

©2015 DOOSAN D 4405211-EN (01-15)

Doosan Infracore Construction Equipment - Drève Richelle 167 - B-1410 Waterloo, Belgium