82 kW (109 HP) @ 1850 rpm	82 kW (109 HP) @ 1850 rpm
14100 - 14500 kg	15600 - 16700 kg
0.24 - 0.76 m^3	0.24 - 0.76 m^3

DX140LC-3 / DX160LC-3 | Crawler Excavator

Doosan – Building your tomorrow today

Be part of the great Doosan family

The Doosan Group was founded in 1896. It is headquartered in Seoul, South Korea, and today is one of the fastest growing companies in the world:

From 1896, the first modern local store in Korea

117 years of history

20th century & beyond, major player in various industries all around the world

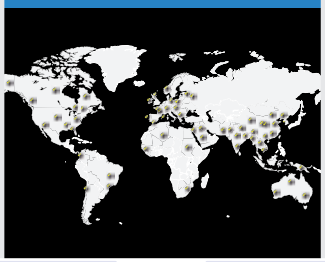

43100 employees in 34 countries

Today, a global leader in the Infrastructure Support Business (ISB)

Global presence:
- 56 subsidiaries
- 3700 distributors worldwide

AN EXPLOSIVE GROWTH RECORD

DOOSAN GROUP REVENUE

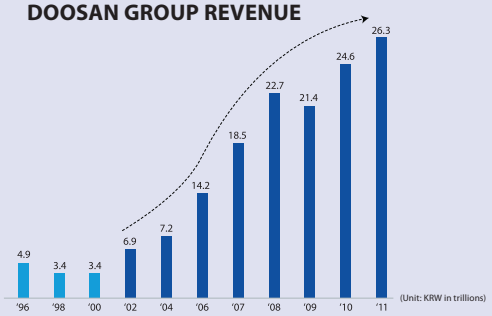

Dramatic growth over the past decade:
- 23% average annual revenue growth since 2000
- From 3.4 to 24.6 KRW trillion between 1998 and 2010

Doosan Group

Doosan Engine
- World N° 2 in medium speed marine diesel engines

Doosan Mecatec
- World N° 1 chemical process equipment company
- 60000 tonnes annual production capacity

Doosan Construction & Engineering
A pioneering leader in construction of residential and public buildings, civil works and industrial facilities.

Doosan Heavy Industries & Construction
- World N° 1 in desalination plant
- World N° 1 in heat recovery steam generator area
- World N° 1 in mould & tool steel
- World N° 3 in crankshafts

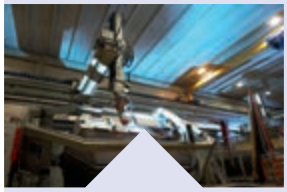

Doosan Infracore
- World N° 1 in compact loaders
- World N° 1 in attachments
- World N° 1 in portable air compressors
- N° 1 in China: 22000 excavators sold in 2010

Doosan – One-stop shop

From machine manufacturer... TO FULL SOLUTION PROVIDER

All Doosan Infracore Construction Equipment products are designed and built to deliver the highest levels of performance and productivity. Parts and service support are intended to fully maintain the performance, productivity and reliability expected of our products throughout their entire lifetime as well as ensure the highest trade-in and residual values.

Ask your dealer for a full range of services designed for you!

Your dealer is your local specialist to ensure you receive the maximum benefits from our integrated package. Think in advance, think to ensure the success of your equipment!

❶ Genuine parts
❷ Extension of warranty
❸ Maintenance contract
❹ Telematics
❺ Monitoring systems
❻ Financial solutions
❼ Doosan approved attachments

Construction Equipment

Machine tools

Engines

Doosan Infracore Construction Equipment

We have been building a global production and business network since 1990 to become one of the world's foremost construction equipment manufacturers. In addition to operating large-scale factories worldwide, we have also established sales subsidiaries, branches and a dealership network all over the globe, making us a truly global player in every respect.

TAKE A TOUR

Reinforced castings and forged steel pivot points
Large, robust boom and arm cylinders for smooth, powerful operation
Reinforced heavy-duty arm and boom to withstand high impact materials and ensure high durability
Two-piece boom available for improved working range
New work lights with improved illumination (standard: 2 front frame, 4 front & 2 rear cab-mounted, 2 boom mounted and 1 rear side)
Massive maximum bucket and arm digging forces of 11.1 and 7.7 t
Large and flat windows for extra visibility and low replacement costs
Very robust dozer blade available as an option
DOOSAN

UNRIVALLED PRODUCTIVITY AND DURABILITY

COMFORTABLE WORKSPACE

- Spacious, newly designed, pressurised ROPS cab with low noise and vibration levels
- Fully adjustable heated air suspension seat as standard
- All-round visibility with better view through the rear and right windows and the large sun roof
- Air conditioning with climate control
- Extra-large door for easy access

EXPERT CONTROL

- Joystick and switches integrated in the control stand for precise operation. All switches grouped together and ergonomically positioned to the right
- Jog shuttle switch to control various machine functions
- 4 working and 4 power modes for maximum efficiency
- Proportional control (flow/pressure) to operate attachments smoothly and precisely
- New, user-friendly 7" TFT LCD colour monitor with full access to machine settings and maintenance data
- Rear camera and large side mirrors
- Inside cab microphone, straight travel pedal, two pump flow & side camera (optional)

MAXIMUM EFFICIENCY

- New powerful DOOSAN DL06K "Common Rail", Stage IIIB compliant, EGR 6 cylinder engine
- e-EPOS System (Electronic Power Optimising System) and hydraulic power boost function for optimised combustion and minimised emissions
- Electronic fan clutch that reduces fuel consumption and noise level while improving cooling performance
- Up to 17.5% reduced fuel consumption according to power mode

Extra durable cast counterweight and robust steel panels and engine hood

High track option available for special applications

EASY MAINTENANCE

- Easy access to all maintenance components
- Maintenance data available directly from control panel
- Fuel pre-filter with water separator
- PC access for maintenance and repairs
- Self-diagnosis function
- Reliable Doosan parts
- Battery cut-off switch and increased capacity (100 Ah)

SOLID STRENGTH

- Heavy-duty X-shaped undercarriage with integrated track spring and idler plus durable box section track frame
- Undercarriage narrow / standard: 2.49 / 2.80 m (DX160LC-3)
- Increased speed and tractive force on any terrain

DX140LC-3

Top performance and fuel efficiency

Expect the best performance from your machine

The DX140LC-3 & DX160LC-3 take even the heaviest tasks in their stride with efficient, dependable performance that saves you time and money:

- Improved hydraulic system using the engine power more effectively, maximising pump output and offering more comfort, smoothness and accuracy
- Increased digging power, lifting capacities and traction force combine for performance you can rely on day after day
- Improved fuel efficiency means you can keep costs down and reduce the environmental impact

6 ASSETS FOR YOUR BENEFIT!

- Power: 82 kW (109 HP) at 1850 rpm
- New 6 cylinder engines: up to 17.5% reduced fuel consumption according to power mode
- Productivity: side lifting capacity at 6 m reach and 3 m height: DX140LC-3: 2.04 t – DX160LC-3: 2.92 t
- Excavation: max. bucket digging force: 11.1 t
- Traction: max. drawbar pull: DX140LC-3: 12.4 t – DX160LC-3: 20.5 t
- Size: Ideal dimensions and working range

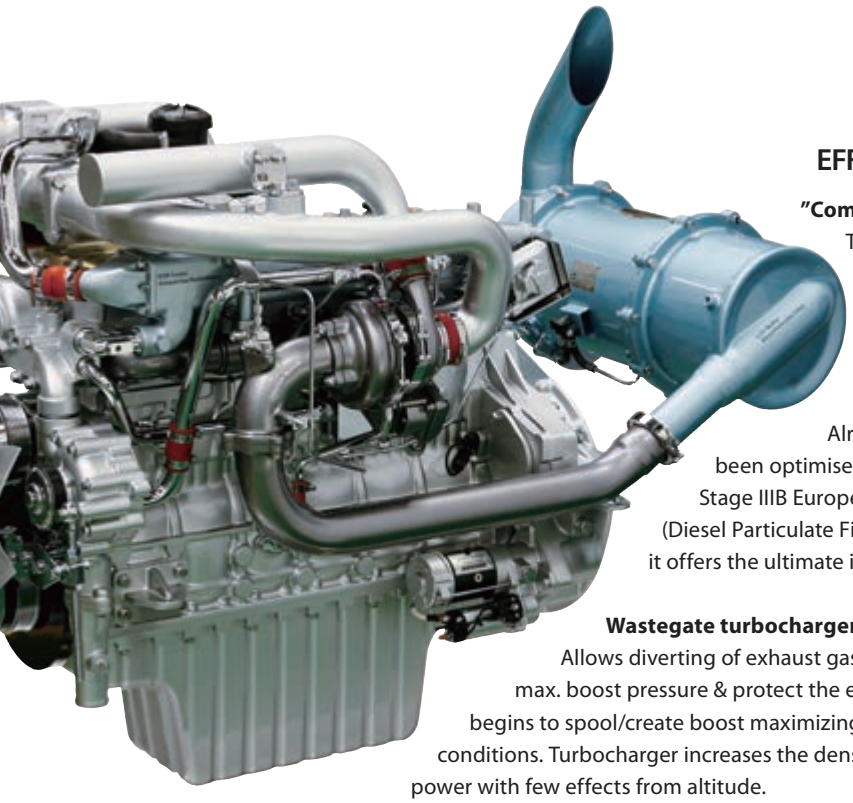

EFFICIENT MANAGEMENT OF FUEL AND HYDRAULICS

"Common Rail" Doosan DL06K engine

The heart of the DX140LC-3 & DX160LC-3 is a powerful DOOSAN DL06K 6 cylinder engine, carefully designed with common rail injection and 4 valves per cylinder. The engine delivers 82 kW (109 HP / 111 PS) at only 1850 rpm. Powerful torque allows efficient use of the hydraulic system and faster working cycles.

Already known for its outstanding reliability, the Doosan engine has been optimised for the DX140LC-3 & DX160LC-3 and is now compliant with the Stage IIIB European regulations using EGR (Exhaust Gas Recirculation) and DPF (Diesel Particulate Filter). In combination with the e-EPOS electronic control system, it offers the ultimate in power delivery and fuel economy.

Wastegate turbocharger

Allows diverting of exhaust gases away from the turbine wheel to better regulate max. boost pressure & protect the engine. It also results in less lag time before turbo begins to spool/create boost maximizing torque, plus reduce wear in high rpm & low load conditions. Turbocharger increases the density of the air, enabling the engine to produce more power with few effects from altitude.

ADVANCED TECHNOLOGY FOR OPTIMUM POWER MANAGEMENT

e-EPOS system (Electronic Power Optimising System)

If the engine is the heart of the excavator, the e-EPOS is its brain. It provides a perfectly synchronised communication link between the engine's ECU (Electronic Control Unit) and the hydraulic system. A CAN (Controller Area Network) system enables a constant flow of information between the engine and hydraulic system, ensuring power is delivered exactly as needed.

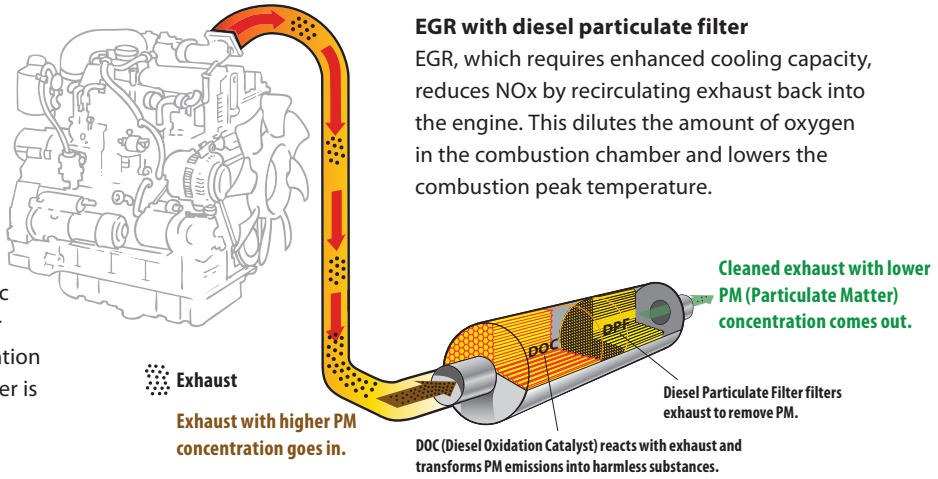

EGR with diesel particulate filter

EGR, which requires enhanced cooling capacity, reduces NOx by recirculating exhaust back into the engine. This dilutes the amount of oxygen in the combustion chamber and lowers the combustion peak temperature.

Simple and efficient

- Choice between 4 power modes and 4 working modes guarantees optimum performance in all conditions
- Proportional auxiliary control for attachments
- Regulation and precise control of the flow rate required by the work group
- Self-diagnosis function allows technical problems to be resolved quickly and efficiently
- Operational memory provides a graphic display of the machine status
- Maintenance and oil change intervals can be displayed

Fuel efficiency

- Auto-idle function enables fuel saving (lowered from 1000 to 800 rpm)
- New electronic fan clutch optimizes cooling for more fuel savings
- Eco gauge: monitors fuel consumption to maintain economic operation
- Improved Main Control Valve (MCV) performance reduces energy loss
- Additional sensor allows a more efficient selection of flow/pressure/rpm according to load requirements

Quick and efficient

The main hydraulic pumps have an increased capacity of 2 x 114 l/min, reducing cycle times for heightened productivity. A high capacity gear pump improves pilot line efficiency.

ECO Gauge and ECO symbol

The ECO gauge shows the average fuel efficiency for 1 minute's operation.
The ECO symbol changes from green to amber, red and grey colour to show the workload when using the equipment.

Electronic viscous fan clutch

For optimum cooling, fan speed is controlled electrically by a fan clutch, resulting in lower fan noise and better fuel efficiency.

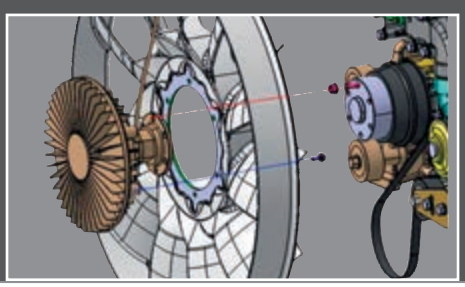

The ideal workspace – designed around you

The DX140LC-3 & DX160LC-3 are designed to provide you with the best possible working conditions. The sophisticated pressurised ROPS cab is ISO-certified for your safety. Its spacious interior offers a fully adjustable, heated air suspension seat. Comfortably seated, you have easy access to several storage compartments and a clear all-round view of the worksite. Noise and vibration levels have been reduced while air conditioning and automatic climate control allow you to keep working for hours on end without feeling tired.

Heated air suspension seat (standard)
As well as being adjustable and offering lumbar support, the seat has an air suspension system to reduce vibrations. It also features a button to activate the seat heating system. A storage box has been placed under the seat for extra convenience.

Storage space
Plenty of storage space means you can keep all your personal belongings within reach. The new cab contains 7 storage compartments including one hot/cool box (linked to the HVAC system).

Air conditioning with climate control
The electronically controlled air conditioning system features 5 different operating modes allowing the operator to adjust the air flow to suit conditions. A recirculated air function is also available.

MP3/USB radio and USB port
A USB port (standard) allows connection of an MP3 player (MP3/USB radio with CD player optional).

ERGONOMIC OPERATOR ENVIRONMENT

Feel the comfort of a seat that fits you perfectly:
Using a dual positioning cursor, you can slide the seat back from the joysticks for the best working position. You can also slide the entire seat assembly to adjust the reach to the control pedals to your leg length.

1. **Large sun roof**
2. **Sun visor**
3. **Straight ergonomic pedals**
4. **Flat, spacious, easy-to-clean floor**
5. **Upper front window is strut-assisted for easy, reliable adjustment and integrates a sun shade**
6. **Joysticks and switches are integrated in adjustable control consoles**
7. **Separate seat height adjustment lever and cushion tilting function**
8. **Storage compartment for sunglasses**
9. **Hot/cool box**
10. **Photo sensor detects radiant energy of the sun and adjusts temperature automatically**

CabSus mount

The cab features a new suspension system (CabSus mount) that combines high vibration dampening with outstanding protection against impact. The system absorbs shocks and vibrations much more effectively than a conventional viscous suspension system.

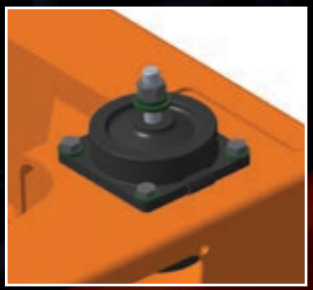

Maximum controllability for enhanced productivity

Doosan's unique new jog shuttle switch gives you easy, precise control over all machine functions. Using highly sensitive joysticks and clear controls positioned for convenient access, you are able to work safely and confidently with minimum effort. Proportional auxiliary flow means that the excavator's huge power is matched by smooth, confident manoeuvres, whether you are digging or loading a dump truck. Swing torque has been increased while the speed of light-load operations such as grading has also been improved due to the larger hydraulic flow volume. The highest standards of efficiency are just a finger's reach away.

Jog shuttle control switch
- Power mode and Work mode
- Auto-idle / Buzzer Stop
- Adjustments of rpm, hydraulic flow and pressure for attachments
- Rear view camera
- Multimedia: - video: AVI (DivX®), MP4, WMV
  - audio: MP3
- Menu change or selection

Colour LCD monitor panel

The upgraded 7" TFT LCD panel features a day and night display and has been relocated within the operator's line of sight. The monitor is user-friendly and gives full access to machine settings and maintenance data. Any abnormality is clearly displayed on the screen, allowing you to work safely and confidently with an accurate overview of all conditions. All functions are totally controllable, directly via the screen or using the Jog shuttle switch.

4 Work modes to suit your application
- 1-way mode and 2-way mode
- Digging mode and lifting mode

4 Power modes for maximum efficiency
- Power plus mode
- Power mode
- Standard mode
- Economy mode

Gauges
- Engine coolant and hydraulic oil temperatures
- Fuel level
- ECO symbol: changes colour when operating conditions change (idle, normal or loading)
- ECO gauge: shows the average fuel efficiency for 1 minute of operation
- Warning symbols

4 Work modes

4 Power modes

Auto-idle

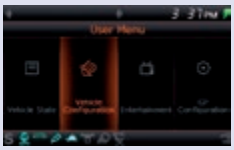

User menu

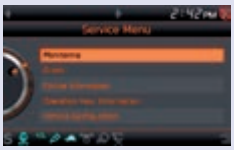

Service menu

Attachment presets

Filter/oil information

Anti-theft protection

Monitoring

Your safety – our biggest concern
- A rear view camera shows you a clear view of what's happening behind the machine. A side view camera is also available as an option for jobs requiring extra safety measures
- Cab and boom lights are fitted as standard, greatly enhancing safety on night-time jobs
- Large side mirrors improve all-round visibility (ISO compliant)

Other standard safety features include: automatic overheating prevention, low oil pressure sensor, engine emergency cut-off switch, auxiliary mode switch (to stop the pump if the control system malfunctions), overload warning device.
An optional travel/swing alarm is also available.

Excellent digging power performance provides quick cycle times and efficient extraction of hard or compacted material.

Simple operation

- "Short stroke" joysticks enable easy, precise control of all operations
- A thumb wheel switch and buttons on the joysticks allow proportional control of attachments such as grabs, crushers and grapples as well as control of rotating attachments
- A straight travel pedal can be installed to facilitate operation when moving in a straight line, to avoid having to use the conventional 2 pedals

Dynamic power management

- Automatic travel speed function
- Activation of the power boost control system increases digging power by 10%
- A one-touch deceleration button immediately reduces engine speed to low or idle
- Auto-idling starts after 4 seconds at low rpm. This decreases fuel consumption and reduces noise levels in the cab
- Jog shuttle dial for engine rpm

Floating boom function (optional)

- The intelligent floating boom mode allows the boom to move up and down freely when external force is applied.
- The breaker mode restricts the boom to downward movement only. This means that the breaker can be operated using only the weight of the work group on the front, without additional force. The breaker remains in constant contact with the object. The result is reduced shock and vibration and longer breaker service life.
- During truck loading, the lowering of the boom can be controlled without hydraulic pump flow discharge. This increases productivity and fuel efficiency.

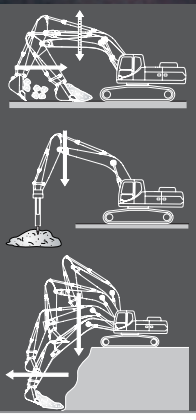

Uncompromised quality and total customer support

Designed for long-term all-round heavy duty

In your profession you need equipment you can depend on. At DOOSAN we use highly specialised design and analysis tools to make sure our machines are as robust and durable as can be. Our materials and structures undergo stringent testing for strength and resilience in the most extreme conditions.

RESILIENT CHAIN FOR TOP CLASS RELIABILITY

The DX140LC-3 & DX160LC-3 are fitted with the same super-strong chain. The 21.6 cm link pitch, 4.7 cm pin diameter and heavy-duty running gear are ideally suited for long, trouble-free service in the roughest conditions.

- Track chains: the sealed and lubricated track chains are specifically designed for better pin and bushing retention. Exclusive heat treatment gives the links a consistent surface and strong core hardness, enhancing their durability

For special applications, a high track undercarriage is also available.

The optional rubber pad contains a heavy duty steel grouser plate within its structure, and is covered with a hardwearing rubber compound.

Strengthened boom

Finite Element Analysis (FEA) has been used to calculate the best load distribution throughout the boom structure. Combined with increased material thickness, this means that element fatigue is limited and both reliability and component life are increased.

Arm assembly

Cast elements and reinforcements have been added to give the arm assembly greater strength and a longer lifetime. The arm centre and end boss have been strengthened and reinforced bars added to better protect the base of the arm.

Protected hydraulics

The hydraulic line routing is straight and simple for a neat, compact design that enhances its durability and minimizes the pressure lost.

Extra-strong X-chassis

The X-shaped undercarriage has been designed using Finite Element Analysis and 3D computer simulation to ensure optimum structural integrity and durability. The swing gear is solid and stable.

Heavy-duty sprocket

The sprocket is deep induction hardened and the depth pattern on the entire tooth profile is optimised for long-lasting service. Cast steel sprockets guarantee the highest resistance and durability even in the most severe applications. The sprocket tooth shape has been redesigned to prevent popping and increase component life.

Integrated track spring and idler

The track spring and idler have been joined together for long-lasting performance and convenient maintenance. A new seal and cylinder body rod have been used to avoid leakage. Special heat treatment ensures optimum hardness and long-lasting resistance to wear.

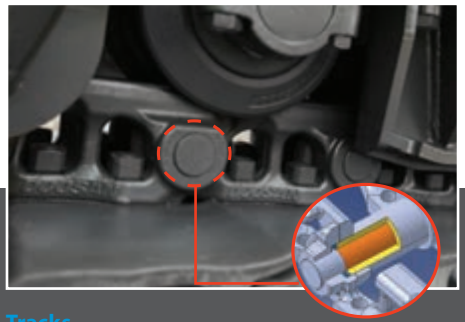

Tracks

For long-term dependability in all conditions, the chain is composed of sealed, self-lubricating links which are isolated from all external contamination. The tracks are locked by mechanically bolted pins. In areas subjected to great stress, the track link thickness has been reinforced.

The heavy-duty undercarriage provides excellent stability and durability. It is designed to excel in tough working environments.

Extra robust parallel dozer

❶ Large reinforced covers protect the dozer cylinders.
❷ The shape of the dozer blade is designed to facilitate pulling and mixing of materials.
❸ Dozer forward design, large working angle and reinforced components to ensure optimum stability when lifting or while working on sloped terrain.

Cast counterweight and steel compartment access

A cast counterweight minimises deformation resulting from external impact. Operating stability has been increased by use of a low centre of gravity design. All external compartment panels are made of steel for extra durability.

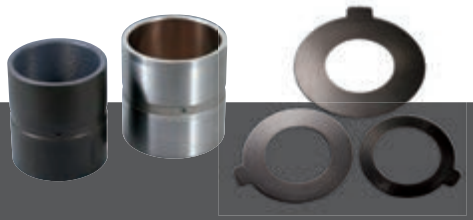

Bushing and polymer shim

A highly lubricated metal is used for the boom pivot in order to increase the component lifetime and extend the greasing intervals.
A polymer shim is added to the bucket pivot to maintain precise control over the equipment and extend greasing intervals.

More value – less maintenance

Short maintenance operations at long intervals mean you can depend on your equipment being available on site when it's needed. Our machines are designed for simple routine maintenance, while skilled Doosan technicians are available to provide extra support when you need it. You can choose the package you need from a broad range of service agreements to get the most out of your machine. Uptime, productivity and residual value are all maximised, making these excavators an economical and rewarding choice.

Maintenance access made simple

- Large handrails are installed along with anti-slip steps and plates, for safer, easier access to the engine compartment
- The cab's air conditioning filter is lockable and placed on the side of the cab for easy access
- A battery cut-off switch makes it easy to disconnect the battery during long-term storage
- The hour meter display can be easily checked from ground level
- Cock valves have been fitted on the pre-filter piping line and fuel tank drain piping to make servicing easier and prevent pollution from leakage

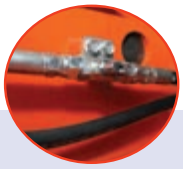

Access to components

- Engine can be easily reached via the large steel top panel
- Access to the various radiators and filters is very easy, making routine maintenance easier

Efficient air filtering

The large capacity forced air cleaner removes over 99% of airborne particles, while the pre-cleaning system uses centrifugal force to eliminate dust. An oil-washed air cleaner is also available as an option.

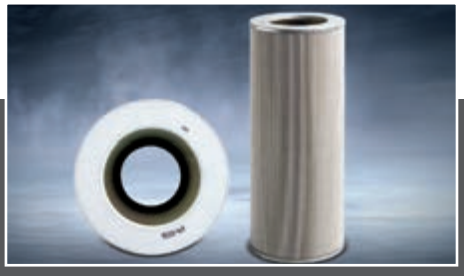

Protective oil return filter

The protection of the hydraulic system is made more effective by the use of glass fibre technology in the main oil return filter. With more than 99.5% of foreign particles filtered out, the oil change interval is extended.

Engine oil filter

The engine oil filter offers a high level of filtration allowing a long interval between changes. It is easy to access and is positioned to avoid contaminating the surrounding environment.

Fuel pre-filter with water separator sensor

High efficiency fuel filtration is attained by the use of multiple filters. These include a fuel pre-filter fitted with a water separator that removes moisture, dirt and debris from the fuel. A warning sensor is added to each fuel filter to indicate when water draining is required.

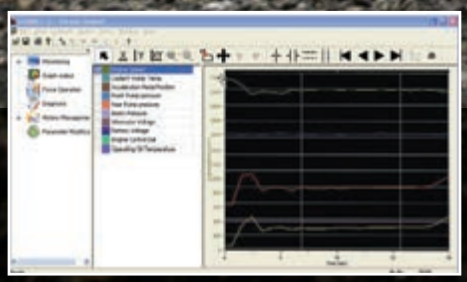

PC monitoring
A PC monitoring function enables connection to the e-EPOS system. Thus, various parameters can be checked during maintenance, including pump pressures and engine speed.
This information can be saved and printed for analysis.

Convenient fuse box
The fuse box is located in the storage compartment behind the seat, providing a clean environment and convenient access.

Regeneration switch
Diesel particulate filter regeneration is automatic and doesn't interfere with operation. When the level of soot is too high, a warning symbol alerts the operator that he can activate regeneration at any time.

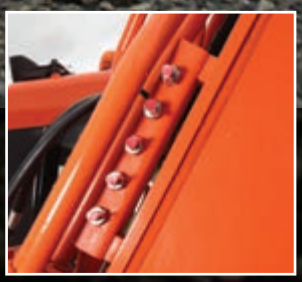

Centralised greasing points
To make maintenance easier, the greasing points have been centralised.

Technical specifications

✱ Engine

• Model

Doosan DL06K
4-Cycle Water-Cooled, Turbocharged,
Common Rail Direct Injection, Exhaust Gas Recirculation
Diesel Particulate Filter (DPF)

• No. of cylinders

6

• Rated power

82 kW (111 PS) at 1850 rpm (DIN 6271)
82 kW (109 HP) at 1850 rpm (SAE J1995)
80 kW (107 HP) at 1850 rpm (SAE J1394)

• Max. torque at 1400 rpm

49 kgf/m (530 Nm)

• Idle (low - high)

800 [± 20] - 1950 [+25/-50] rpm

• Piston displacement

5890 cm^3

• Bore x stroke

100 mm x 125 mm

• Starter

24 V / 6.0 kW

• Batteries – Alternator

2 x 12 V, 100 Ah – 24 V, 80 A

• Air filter

Double element and pre-filtered dust separator with automatic dust evacuation.

✱ Hydraulic system

The brain of the excavator is the e-EPOS (Electronic Power Optimizing System). It allows the efficiency of the hydraulic system to be optimised for all working conditions and minimises fuel consumption. The e-EPOS is connected to the engine's electronic control unit (ECU) via a data transfer link to harmonise the operation of the engine and hydraulics.

- The hydraulic system enables independent or combined operations
- Two travel speeds offer either increased torque or high speed
- Cross-sensing pump system for fuel savings
- Auto deceleration system
- Four operating modes, four power modes
- Button control of flow and pressure in auxiliary hydraulic circuits
- Computer-aided pump flow control

• Maximum system pressure

Implement (boom/arm/bucket):	
Work, travel:	330 kg/cm^2 [+10/0]
Rotation:	275 kg/cm^2
Power:	350 kg/cm^2 [+10/0]

✱ Pumps

Pump	Type	Displacement (cm^3/rev)	Max. flow @ 1850 rpm (l/min)	Relief valve pressure (kgf/cm^2)
Main (2)	Tandem, Axial piston	2 x 61.6	2 x 114	-
Pilot	Gear	15.0	27.7	40.0

✱ Weight

	Shoe width (mm)	Operating weight (t)		Ground pressure (kgf/cm^2)	
		DX140LC-3	DX160LC-3	DX140LC-3	DX160LC-3
Triple grouser	600 (Std)	14.4	15.8	0.36	0.38
	500	14.1	15.6	0.42	0.45
	700	14.5	16.0	0.31	0.33
	800	-	16.2	-	0.30
	900	-	16.4	-	0.26
Rubber pads	500	14.0	-	0.41	-

✱ Undercarriage

Very robust construction throughout. All welded structures designed to limit stresses. High-quality, durable materials. Lateral chassis welded and rigidly attached to undercarriage. Track rollers lubricated for life. Idlers and sprockets fitted with floating seals. Track shoes made of induction-hardened alloy with triple grouser. Heat-treated connecting pins. Hydraulic track adjuster with shock-absorbing tension mechanism.

• Number of rollers and track shoes per side	**DX140LC-3 / DX160LC-3**
Upper rollers (standard shoe):	1 / 2
Lower rollers:	7 / 7
Number of links & shoes per side:	44 / 46
Overall track length:	3755 mm / 3968 mm

✱ Hydraulic cylinders

Piston rods and cylinder bodies of high-strength steel.
Shock-absorbing mechanism fitted in all cylinders for shock-free operation and extended piston life.

Cylinders	Quantity	Bore x rod diameter x stroke (mm)
Boom	2	110 x 75 x 1085
Arm	1	115 x 80 x 1108
Bucket	1	100 x 70 x 900
Two-piece boom	2	110 x 75 x 940
Two-piece boom, upper	1	115 x 80 x 1068
Two-piece boom, lower	1	140 x 85 x 720

✱ Swing mechanism

- High-torque, axial piston motor with 2-stage planetary reduction gear bathed in oil
- Swing circle: single-row, shear type ball bearing with induction-hardened internal gear
- Internal gear and pinion immersed in lubricant

• Max. swing speed

(Eff.=98%) 0 to 11 rpm

• Max. swing torque

(Eff.=78%) 3720 kgf/m

✱ Drive

Each track is driven by an independent, high-torque axial piston motor through a planetary reduction gearbox. Two levers / foot pedals guarantee smooth travel with counter-rotation on demand.

• Travel speed (low - high)	DX140LC-3 / DX160LC-3
	3.0 - 5.0 km/h / 2.5 - 4.0 km/h
• Maximum traction	**DX140LC-3 / DX160LC-3**
	6.7 - 12.4 t / 12.5 - 20.5 t

• Maximum gradeability

35° / 70%

✱ Fluid capacities

• Fuel tank

265 l

• Cooling system (radiator)

21 l

• Hydraulic oil tank

150 l

• Engine oil

25 l

• Swing drive

5 l

• Travel device

2 x 3 l

✱ Environment

Noise levels comply with environmental regulations (dynamic values).

• Noise level LwA

Guaranteed - measured: 101 dB(A) - 100 dB(A) (2000/14/EC)

• Operator LpA

70 dB(A) (ISO 6396)

✱ Buckets

DX140LC-3 Standard track 2.59 m / rubber pads track 2.49 m										DX160LC-3 Standard track 2.80 m / narrow track 2.59 m									
Bucket Type	Capacity (m^3)	Width (mm)		Weight (kg)	Boom: 4.60 m			Two-piece boom: 4.98 m		Bucket Type	Capacity (m^3)	Width (mm)		Weight (kg)	Boom: 4.60 m			Two-piece boom: 4.98 m	
	SAE	With side cutters	W/O side cutters		Arm: 2.10 m	Arm: 2.50 m	Arm: 3.00 m	Arm: 2.10 m	Arm: 2.50 m		SAE	With side cutters	W/O side cutters		Arm: 2.10 m	Arm: 2.50 m	Arm: 3.00 m	Arm: 2.10 m	Arm: 2.50 m
GP	0.24	534	464	272	A / A	A / A	A / A	A / -	A / -	GP	0.24	534	464	272	A / A	A / A	A / A	A / A	A / A
	0.39	820	736	338	A / A	A / A	A / A	A / -	A / -		0.39	820	736	338	A / A	A / A	A / A	A / A	A / A
	0.45	911	821	376	A / A	A / A	A / A	A / -	A / -		0.45	911	821	376	A / A	A / A	A / A	A / A	A / A
	0.51	991	907	389	A / A	A / A	A / B	A / -	B / -		0.51	991	907	389	A / A	A / A	A / B	A / A	A / B
	0.59	1081	997	408	A / A	B / B	C / C	B / -	C / -		0.59	1081	997	408	A / A	A / A	A / B	A / B	A / C
	0.64	1167	1083	431	A / B	B / C	C / C	C / -	D / -		0.64	1167	1083	431	A / A	A / B	B / C	A / C	B / D
	0.76	1339	1255	479	C / C	C / D	D / D	D / -	D / -		0.76	1339	1255	479	A / B	A / C	B / D	A / D	B / D
HD	0.42	827	762	456	A / A	A / A	A / A	A / -	A / -	HD	0.42	827	762	456	A / A	A / A	A / A	A / A	A / A
	0.49	913	848	491	A / A	A / A	B / B	A / -	B / -		0.49	913	848	491	A / A	A / A	A / B	A / A	A / B
	0.54	981	916	511	A / A	B / B	C / C	B / -	C / -		0.54	981	916	511	A / A	A / B	B / C	A / B	B / C

A: Suitable for materials with a density less than or equal to 2100 kg/m^3
B: Suitable for materials with a density less than or equal to 1800 kg/m^3
C: Suitable for materials with a density less than or equal to 1500 kg/m^3
D: Suitable for materials with a density less than or equal to 1200 kg/m^3
Based on ISO 10567 and SAE J296, arm length without quick-coupler and without dozer. Shoe: 600 mm (except rubber pads: 500 mm)
For reference only.

✱ Digging forces (ISO)

		Boom: 4600 mm Arm: 3000 mm Bucket: 0.45 m^3	Boom: 4600 mm Arm: 2100 mm Bucket: 0.59 m^3	Boom: 4600 mm Arm: 2500 mm Bucket: 0.51 m^3
BUCKET (Normal/Press. Up)	t	10.5 / 11.1	10.5 / 11.1	10.5 / 11.1
	kN	102.9 / 108.8	102.9 / 108.8	102.9 / 108.8
ARM (Normal/Press. Up)	t	5.6 / 6.0	7.2 / 7.7	6.2 / 6.5
	kN	54.9 / 58.8	70.6 / 75.5	60.8 / 63.7

Dimensions

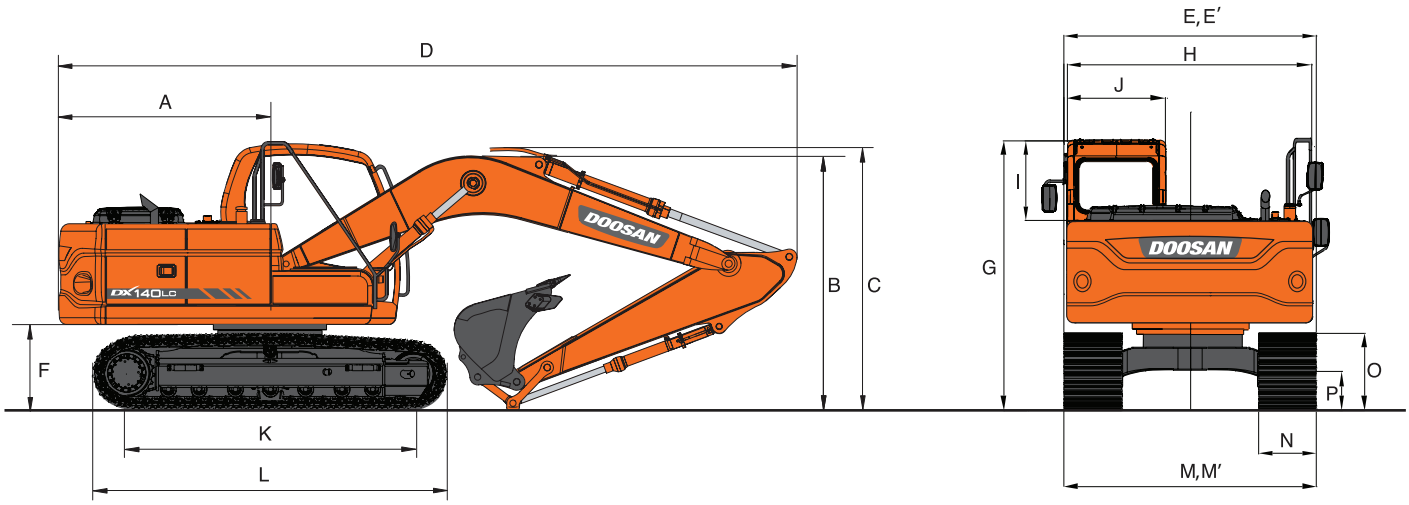

✱ Dimensions

		DX140LC-3					DX160LC-3					DX160LC-3 HT		
Boom length - mm		One-piece boom: 4600			Two-piece boom: 4980		One-piece boom: 4600			Two-piece boom: 4980		One-piece boom: 4600		
Arm length - mm		3000	2100	2500	2100	2500	3000	2100	2500	2100	2500	3000	2100	2500
Bucket capacity - m³		0.45	0.59	0.51	0.51	0.45	0.45	0.59	0.51	0.51	0.45	0.45	0.59	0.51
A	Tail swing radius - mm	2200	2200	2200	2200	2200	2200	2200	2200	2200	2200	2200	2200	2200
B	Shipping height (boom) - mm	3065	2480	2635	2615	2800	3055	2510	2675	2690	2845	2955	2410	2575
C	Shipping height (hose) - mm	3180	2640	2820	2840	3000	3150	2620	2800	2845	2970	3050	2520	2700
D	Shipping length - mm	7635	8045	7680	8045	7970	7700	7700	7700	8070	8025	7700	7700	7700
E	Shipping width std. - mm	2590	2590	2590	2590	2590	2590	2590	2590	2590	2590	2800	2800	2800
E'	Shipping width narrow - mm	-	-	-	-	-	2490	2490	2490	2490	2490	-	-	-
F	Counterweight clearance - mm	894	894	894	894	894	1035	1035	1035	1035	1035	1190	1190	1190
G	Height over cab - mm	2773	2773	2773	2773	2773	2914	2914	2914	2914	2914	3068	3068	3068
H	House width - mm	2540	2540	2540	2540	2540	2540	2540	2540	2540	2540	2540	2540	2540
I	Cab height above house - mm	1045	1045	1045	1045	1045	1045	1045	1045	1045	1045	1045	1045	1045
J	Cab width - mm	1010	1010	1010	1010	1010	1010	1010	1010	1010	1010	1010	1010	1010
K	Tumbler distance - mm	3035	3035	3035	3034	3034	3180	3180	3180	3180	3180	3180	3180	3180
L	Track length - mm	3755	3755	3755	3755	3755	3968	3968	3968	3968	3968	3968	3968	3968
M	Undercarriage width std - mm	2590	2590	2590	2590	2590	2800	2800	2800	2800	2800	2800	2800	2800
M'	Undercarriage width narrow - mm	-	-	-	-	-	2490	2490	2490	2490	2490	-	-	-
N	Shoe width std. - mm	600	600	600	600	600	600	600	600	600	600	600	600	600
O	Track height - mm	794	794	794	794	794	917	917	917	917	917	1020	1020	1020
P	Ground clearance - mm	410	410	410	410	410	455	455	455	455	455	608	608	608

✱ Component weights

Item	unit	DX140LC-3	DX160LC-3	DX160LC-3 HT	Remarks
Upper structure without front	kg	6611	6611	6611	without counterweight
Counterweight	kg	2200	2200	2200	
Lower structure assembly Std. / narrow	kg	5091 / -	6465 / 6390	6725 / -	
Front assembly	kg	2676	2676	2676	
• Boom 4.60 m	kg	778	778	778	including bushing
• Arm 3.00 m	kg	469	469	469	including bushing
• Bucket 0.45 m³	kg	376	376	376	
• Boom cylinder (each)	kg	106	106	106	
• Arm cylinder	kg	143	143	143	
• Bucket cylinder	kg	89	89	89	
• Dozer blade (2590 mm)	kg	619	847	-	600 mm shoe
• Dozer blade cylinder (each)	kg	70	90	-	
Two-piece boom - upper / lower	kg	592 / 384	592 / 384	-	
Two-piece boom cylinder	kg	150	150	-	
Arm 2.10 m / 2.50 m	kg	374 / 418	374 / 418	374 / 418	
Dozer blade 2490 mm	kg	606	-	-	500 mm shoe
Dozer blade 2690 mm	kg	632	-	-	700 mm shoe

Working range

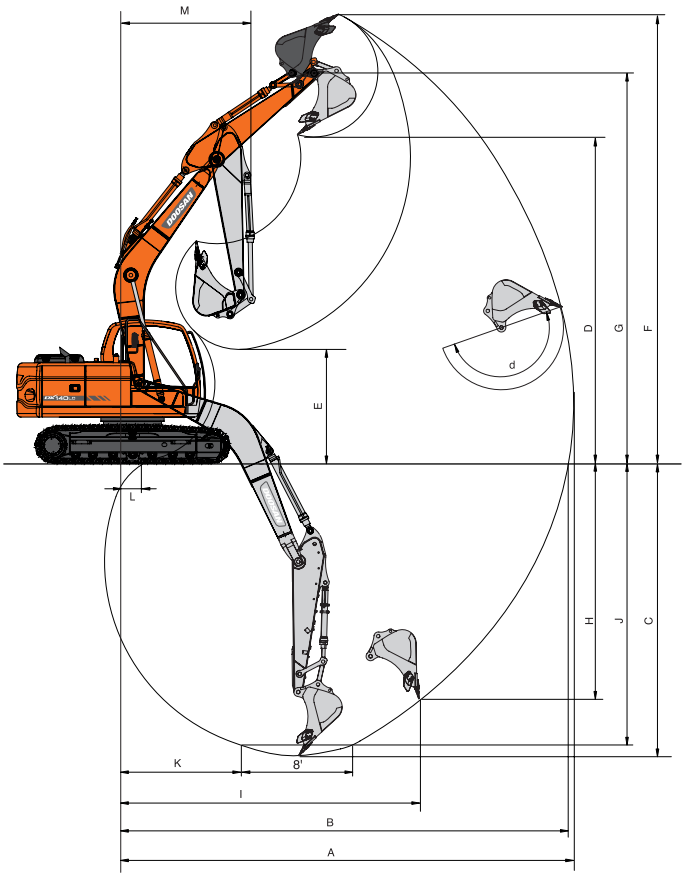

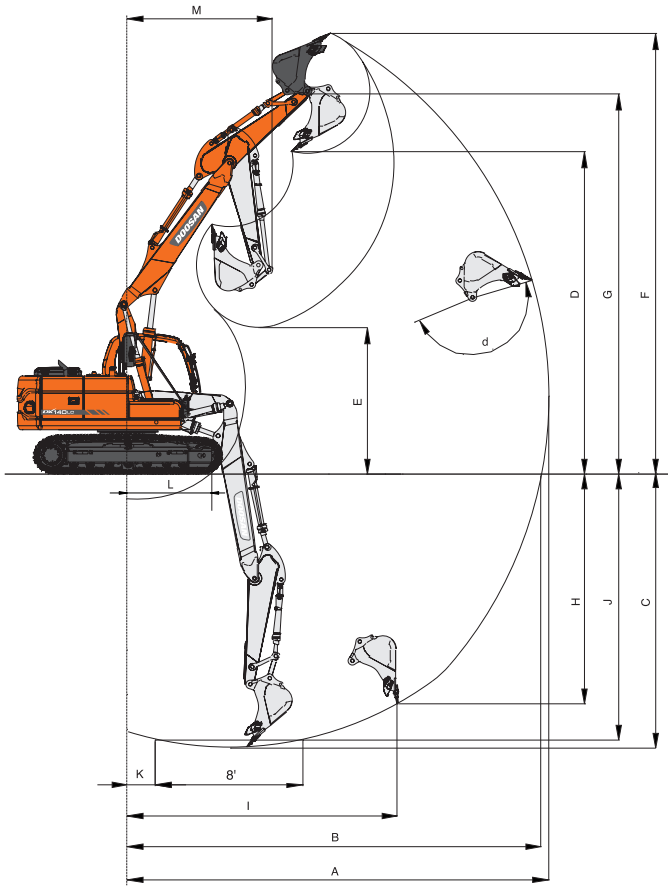

✱ Working range

		DX140LC-3					DX160LC-3					DX160LC-3 HT		
	Boom length - mm	One-piece boom: 4600			Two-piece boom: 4980		One-piece boom: 4600			Two-piece boom: 4980		One-piece boom: 4600		
	Arm length - mm	3000	2100	2500	2100	2500	3000	2100	2500	2100	2500	3000	2100	2500
	Bucket capacity - m^3	0.45	0.59	0.51	0.51	0.45	0.45	0.59	0.51	0.51	0.45	0.45	0.59	0.51
A	Max. digging reach - mm	8665	7815	8285	8260	8720	8665	7815	8285	8260	8720	8665	7815	8285
B	Max. digging reach (ground) - mm	8530	7660	8140	8115	8585	8530	7660	8140	8115	8585	8515	7645	8125
C	Max. digging depth - mm	6135	5235	5635	5295	5725	5995	5095	5495	5155	5585	5840	4940	5340
D	Max. loading height - mm	6440	5865	6315	6395	6855	6580	6005	6455	6535	6995	6735	6165	6610
E	Min. loading height - mm	1725	2575	2185	3070	2715	1865	2715	2325	3210	2855	2020	2870	2480
F	Max. digging height - mm	8745	8150	8660	8730	9235	8885	8290	8800	8870	9375	9040	8445	8955
G	Max. bucket pin height - mm	7655	7080	7535	7615	8075	7795	7225	7675	7755	8215	7950	7380	7830
H	Max. vertical wall depth - mm	4685	3710	4495	4110	4680	4545	3570	4355	3970	4540	4390	3415	4200
I	Max. radius vertical - mm	5970	5745	5605	5870	5730	5970	5745	5605	5870	5730	5970	5745	5605
J	Max. digging depth (8´ level) - mm	5890	4910	5395	5180	5615	5750	4770	5255	5040	5475	5595	4615	5100
K	Min. radius 8´ line - mm	1825	1805	1915	910	910	1825	1805	1915	910	910	1825	1805	1915
L	Min. digging reach - mm	-225	955	325	2025	1855	-225	955	325	2025	1855	-225	955	325
M	Min. swing radius - mm	2625	2285	2380	2775	2970	2625	2285	2380	2775	2970	2625	2285	2380
d	Bucket angle - °	174	174	174	174	174	174	174	174	174	174	174	174	174

High track option.

Lifting capacities

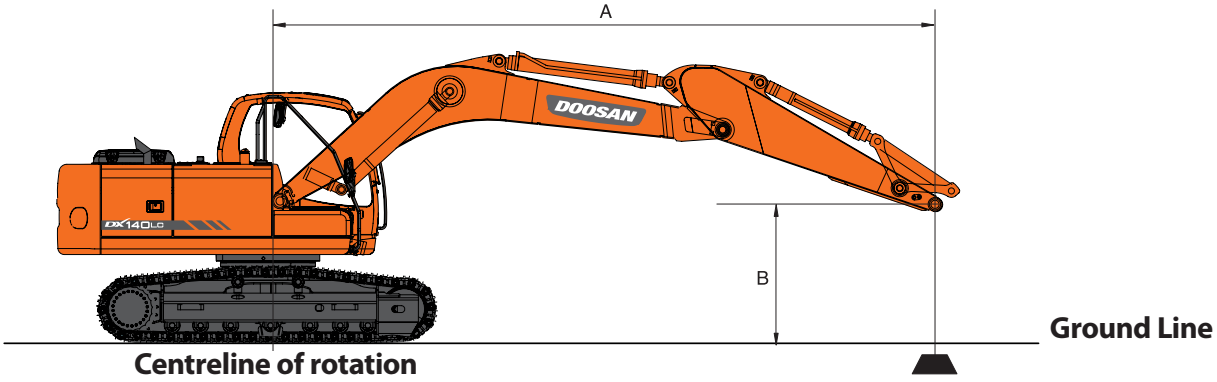

DX140LC-3 – Standard configuration

Standard track width: 2590 mm • Boom: 4600 mm • Arm: 2500 mm • W/O Bucket • Shoe: 600 mm • Counterweight: 2200 kg **Units: 1000 kg**

A (m) / B (m)	Dozer	3.0		4.5		6.0		Max. lift		
										A (m)
7.5	Without							*2.42	*2.42	4.34
	Dozer up							*2.42	*2.42	4.34
6.0	Without							*2.04	*2.04	5.91
	Dozer up							*2.04	*2.04	5.91
4.5	Without			*3.34	*3.34	*3.20	2.15	*1.94	1.70	6.81
	Dozer up			*3.34	*3.34	*3.20	2.27	*1.94	1.80	6.81
3.0	Without	*5.40	*5.40	*4.37	3.27	3.23	2.06	*1.95	1.47	7.30
	Dozer up	*5.40	*5.40	*4.37	3.44	3.78	2.18	*1.95	1.56	7.30
1.5	Without	*8.89	5.53	4.90	3.00	3.11	1.95	*2.08	1.37	7.45
	Dozer up	*8.89	5.84	*5.71	3.17	3.65	2.07	*2.08	1.47	7.45
0 (Ground)	Without	*8.35	5.08	4.66	2.79	3.00	1.85	2.24	1.38	7.29
	Dozer up	*8.35	5.39	5.48	2.96	3.54	1.97	2.34	1.48	7.29
-1.5	Without	9.40	4.98	4.55	2.69	2.94	1.80	2.47	1.52	6.79
	Dozer up	*10.12	5.29	5.37	2.87	3.49	1.92	*2.85	1.62	6.79
-3.0	Without	9.49	5.05	4.56	2.71			3.07	1.88	5.87
	Dozer up	*10.39	5.36	5.38	2.88			3.63	2.01	5.87
-4.5	Without	*7.93	5.28					5.20	3.11	4.25
	Dozer up	*7.93	5.59					5.35	3.30	4.25

DX140LC-3 – Option 1

Standard track width: 2590 mm • Boom: 4600 mm • Arm: 3000 mm • W/O Bucket • Shoe: 600 mm • Counterweight: 2200 kg **Units: 1000 kg**

A (m) / B (m)	Dozer	3.0		4.5		6.0		Max. lift		
										A (m)
7.5	Without							*2.42	*2.42	4.34
	Dozer up							*2.42	*2.42	4.34
6.0	Without							*2.04	*2.04	5.91
	Dozer up							*2.04	*2.04	5.91
4.5	Without			*3.34	*3.34	*3.20	2.15	*1.94	1.70	6.81
	Dozer up			*3.34	*3.34	*3.20	2.27	*1.94	1.80	6.81
3.0	Without	*5.40	*5.40	*4.37	3.27	3.23	2.06	*1.95	1.47	7.30
	Dozer up	*5.40	*5.40	*4.37	3.44	3.78	2.18	*1.95	1.56	7.30
1.5	Without	*8.89	5.53	4.90	3.00	3.11	1.95	*2.08	1.37	7.45
	Dozer up	*8.89	5.84	*5.71	3.17	3.65	2.07	*2.08	1.47	7.45
0 (Ground)	Without	*8.35	5.08	4.66	2.79	3.00	1.85	2.24	1.38	7.29
	Dozer up	*8.35	5.39	5.48	2.96	3.54	1.97	2.34	1.48	7.29
-1.5	Without	9.40	4.98	4.55	2.69	2.94	1.80	2.47	1.52	6.79
	Dozer up	*10.12	5.29	5.37	2.87	3.49	1.92	*2.85	1.62	6.79
-3.0	Without	9.49	5.05	4.56	2.71			3.07	1.88	5.87
	Dozer up	*10.39	5.36	5.38	2.88			3.63	2.01	5.87
-4.5	Without	*7.93	5.28					5.20	3.11	4.25
	Dozer up	*7.93	5.59					5.35	3.30	4.25

DX140LC-3 – Option 2 Rubber pads

Standard track width: 2490 mm • Boom: 4600 mm • Arm: 2500 mm • W/O Bucket • Shoe: 500 mm Rubber • Counterweight: 2200 kg **Units: 1000 kg**

A (m) / B (m)	3.0		4.5		6.0		Max. lift		
									A (m)
7.5							*2.75	*2.75	3.61
6.0			*3.64	3.55			*2.16	*2.16	5.42
4.5			*3.92	3.48	*3.19	2.16	*2.00	1.92	6.39
3.0	*6.63	6.23	*4.92	3.28	3.63	2.09	*1.99	1.65	6.91
1.5	*8.33	5.50	5.50	3.04	3.52	1.99	*2.11	1.54	7.07
0 (Ground)	*7.16	5.21	5.30	2.86	3.44	1.91	*2.36	1.57	6.90
-1.5	*10.34	5.19	5.23	2.81	3.41	1.89	*2.89	1.75	6.37
-3.0	*9.80	5.30	5.29	2.86			4.07	2.26	5.37

DX140LC-3 – Option 3 Two-piece boom

Standard track width: 2590 mm • Boom: 2000 mm LB + 3350 mm UB • Arm: 2500 mm • W/O Bucket • Shoe: 600 mm • Counterweight: 2200 kg **Units: 1000 kg**

A (m) / B (m)	3.0		4.5		6.0		7.5		Max. lift		
											A (m)
7.5									*2.77	*2.77	4.43
6.0			*2.89	*2.89					*2.29	2.10	5.98
4.5			*3.37	*3.37	3.29	2.09			*2.13	1.62	6.88
3.0			*4.47	3.12	3.18	1.99			*2.12	1.39	7.36
1.5			4.75	2.83	3.04	1.86	2.15	1.31	2.15	1.31	7.50
0 (Ground)			4.54	2.65	2.94	1.77			2.19	1.32	7.34
-1.5	*7.41	4.82	4.47	2.59	2.90	1.73			2.41	1.46	6.85
-3.0	9.44	4.96	4.53	2.64					3.01	1.82	5.94

DX160LC-3 – Standard configuration

Standard track width: 2800 mm • Boom: 4600 mm • Arm: 2500 mm • W/O Bucket • Shoe: 700 mm • Counterweight: 2200 kg **Units: 1000 kg**

A (m) / B (m)	Dozer	3.0		4.5		6.0		Max. lift		
										A (m)
7.5	Without							*2.51	*2.51	3.78
	Dozer up							*2.51	*2.51	3.78
6.0	Without			*3.39	*3.39			*2.01	*2.01	5.50
	Dozer up			*3.39	*3.39			*2.01	*2.01	5.50
4.5	Without			*3.71	*3.71	*3.08	2.99	*1.87	*1.87	6.44
	Dozer up			*3.71	*3.71	*3.08	*3.08	*1.87	*1.87	6.44
3.0	Without	*6.42	*6.42	*4.68	4.52	*4.05	2.92	*1.87	*1.87	6.93
	Dozer up	*6.42	*6.42	*4.68	*4.68	*4.05	3.20	*1.87	*1.87	6.93
1.5	Without	*7.45	*7.45	*5.84	4.27	4.15	2.82	*1.98	*1.98	7.06
	Dozer up	*7.45	*7.45	*5.84	4.67	*4.55	3.09	*1.98	*1.98	7.06
0 (Ground)	Without	*6.89	*6.89	6.30	4.10	4.06	2.74	*2.23	*2.23	6.87
	Dozer up	*6.89	*6.89	*6.64	4.51	*4.94	3.02	*2.23	*2.23	6.87
-1.5	Without	*10.06	7.62	6.23	4.05	4.04	2.72	*2.76	2.54	6.32
	Dozer up	*10.06	8.37	*6.80	4.45	*4.92	3.00	*2.76	*2.76	6.32
-3.0	Without	*9.03	7.75	*6.06	4.11			*4.08	3.30	5.29
	Dozer up	*9.03	8.50	*6.06	4.51			*4.08	3.63	5.29

DX160LC-3 – Option 1 Narrow

Narrow track width: 2590 mm • Boom: 4600 mm • Arm: 2500 mm • W/O Bucket • Shoe: 600 mm • Counterweight: 2200 kg **Units: 1000 kg**

A (m) / B (m)	3.0		4.5		6.0		Max. lift		
									A (m)
7.5							*2.51	*2.51	3.78
6.0			*3.39	*3.39			*2.01	*2.01	5.50
4.5			*3.71	*3.71	*3.08	2.67	*1.87	*1.87	6.44
3.0	*6.42	*6.42	*4.68	4.01	*4.05	2.60	*1.87	*1.87	6.93
1.5	*7.45	6.83	*5.84	3.77	4.13	2.50	*1.98	1.97	7.06
0 (Ground)	*6.89	6.56	6.26	3.61	4.04	2.42	*2.23	2.01	6.87
-1.5	*10.06	6.55	6.20	3.56	4.02	2.40	*2.76	2.25	6.32
-3.0	*9.03	6.68	*6.06	3.61			*4.08	2.92	5.29

DX160LC-3 – Option 2 Two-piece boom Narrow

Narrow track width: 2590 mm • Boom: 2000 mm LB + 3350 mm UB • Arm: 2500 mm • W/O Bucket • Shoe: 600 mm • Counterweight: 2200 kg **Units: 1000 kg**

A (m) / B (m)	3.0		4.5		6.0		Max. lift		
									A (m)
7.5			*2.74	*2.74			*2.57	*2.57	4.57
6.0			*2.71	*2.71	*2.36	*2.36	*2.15	*2.15	6.06
4.5			*3.20	*3.20	*3.17	2.67	*2.02	*2.02	6.92
3.0			*4.26	3.95	*3.60	2.56	*2.01	1.84	7.38
1.5			*5.46	3.66	4.09	2.44	*2.11	1.75	7.50
0 (Ground)			6.16	3.48	3.99	2.35	*2.33	1.79	7.32
-1.5	*7.26	6.34	6.10	3.43	3.96	2.32	*2.75	1.97	6.81
-3.0	*9.38	6.48	6.17	3.49			*3.72	2.46	5.86

1. Lifting capacities are in compliance with ISO 10567:2007(E).
2. The load point is at the end of the arm.
3. * = The nominal loads are based on hydraulic capacity.
4. The nominal loads shown do not exceed 75% of tipping loads or 87% of hydraulic lifting capacity.
5. For lifting capacity with bucket, simply subtract the actual weight of the bucket from the values.
6. The configurations indicated do not necessarily reflect the standard equipment of the machine.

: Rating over front
: Rating over side or 360°

Lifting capacities

DX160LC-3
DX160LC-3HT

DX160LC-3 – Option 3 Two-piece boom

Standard track width: 2800 mm • Boom: 2000 mm LB + 3350 mm UB • Arm: 2500 mm • W/O Bucket • Shoe: 600 mm • Counterweight: 2200 kg **Units: 1000 kg**

A (m) / B (m)	Dozer	3.0		4.5		6.0		7.5		Max. lift		
												A (m)
7.5	Without			*2.71	*2.71					*2.55	*2.55	4.57
	Dozer up			*2.71	*2.71					*2.55	*2.55	4.57
6.0	Without			*2.70	*2.70	*2.34	*2.34			*2.13	*2.13	6.06
	Dozer up			*2.70	*2.70	*2.34	*2.34			*2.13	*2.13	6.06
4.5	Without			*3.19	*3.19	*3.16	2.98			*1.99	*1.99	6.92
	Dozer up			*3.19	*3.19	*3.16	*3.16			*1.99	*1.99	6.92
3.0	Without			*4.25	*4.25	*3.59	2.88			*1.98	*1.98	7.38
	Dozer up			*4.25	*4.25	*3.59	3.16			*1.98	*1.98	7.38
1.5	Without			*5.45	4.15	4.10	2.75	*2.10	1.97	*2.08	1.97	7.50
	Dozer up			*5.45	4.55	*4.16	3.03	*2.10	*2.10	*2.08	*2.08	7.50
0 (Ground)	Without			6.18	3.97	4.00	2.65			*2.29	2.01	7.32
	Dozer up			*6.31	4.37	*4.64	2.93			*2.29	2.23	7.32
-1.5	Without	*7.25	*7.25	6.12	3.91	3.97	2.62			*2.72	2.23	6.81
	Dozer up	*7.25	*7.25	*6.62	4.32	*4.85	2.90			*2.72	2.47	6.81
-3.0	Without	*9.37	7.56	6.19	3.97					*3.68	2.78	5.86
	Dozer up	*9.37	8.30	*6.32	4.38					*3.68	3.07	5.86

DX160LC-3 HT – Standard configuration

Standard track width: 2800 mm • Boom: 4600 mm • Arm: 2500 mm • W/O Bucket • Shoe: 600 mm • Counterweight: 2200 kg **Units: 1000 kg**

A (m) / B (m)	3.0		4.5		6.0		Max. lift		
									A (m)
7.5							*2.51	*2.51	3.78
6.0			*3.39	*3.39			*2.01	*2.01	5.50
4.5			*3.71	*3.71	*3.08	2.99	*1.87	*1.87	6.44
3.0	*6.42	*6.42	*4.68	4.52	*4.05	2.92	*1.87	*1.87	6.93
1.5	*7.45	*7.45	*5.84	4.27	4.15	2.82	*1.98	*1.98	7.06
0 (Ground)	*6.89	*6.89	6.30	4.10	4.06	2.74	*2.23	*2.23	6.87
-1.5	*10.06	7.62	6.23	4.05	4.04	2.72	*2.76	2.54	6.32
-3.0	*9.03	7.75	*6.06	4.11			*4.08	3.30	5.29

DX160LC-3 HT – Option 1

Standard track width: 2800 mm • Boom: 4600 mm • Arm: 3000 mm • W/O Bucket • Shoe: 600 mm • Counterweight: 2200 kg **Units: 1000 kg**

A (m) / B (m)	3.0		4.5		6.0		Max. lift		
									A (m)
7.5							*2.23	*2.23	4.46
6.0							*1.90	*1.90	5.99
4.5			*3.17	*3.17	*3.04	3.03	*1.81	*1.81	6.86
3.0	*5.26	*5.26	*4.16	*4.16	*3.71	2.94	*1.83	*1.83	7.32
1.5	*8.49	8.09	*5.41	4.31	4.16	2.82	*1.95	*1.95	7.45
0 (Ground)	*7.90	7.64	6.30	4.10	4.05	2.72	*2.21	2.08	7.27
-1.5	*9.76	7.55	6.20	4.01	4.00	2.68	*2.71	2.29	6.75
-3.0	*9.61	7.63	6.22	4.03			*3.89	2.85	5.80
-4.5	*7.14	*7.14					*5.00	4.82	4.10

1. Lifting capacities are in compliance with ISO 10567:2007(E).
2. The load point is at the end of the arm.
3. * = The nominal loads are based on hydraulic capacity.
4. The nominal loads shown do not exceed 75% of tipping loads or 87% of hydraulic lifting capacity.
5. For lifting capacity with bucket, simply subtract the actual weight of the bucket from the values.
6. The configurations indicated do not necessarily reflect the standard equipment of the machine.

: Rating over front
: Rating over side or 360°

Standard and optional equipment

DX140LC-3
DX160LC-3

✱ Standard equipment

Engine
DOOSAN DL06K Diesel engine combined with e-EPOS System, Common Rail direct injection, EU Stage IIIB compliant, EGR
Diesel particulate filter (DPF)
Auto-idle
Hydraulic system
Boom and arm flow regeneration
Swing anti-rebound valves
Spare ports (valve)
One-touch power boost
Breaker piping
Cylinder cushioning & contamination seals
Control of auxiliary hydraulic flow and pressure from the display panel
Cab & Interior
Roll Over Protective Structure (ROPS)
Pressurised, sound-insulated and CabSus mounted cab
Heated, adjustable air suspension seat with adjustable headrest and armrest
Jog shuttle switch with attachment management system
Air conditioning with climate control
Pull-up type front window with sun roller blind and removable lower front window
Sliding left windows with lock
Ceiling light
Intermittent upper windshield wiper
Multiple storage compartments (e.g. document holder under seat)
Rain visor
Flat, spacious, easy-to-clean floor
Cigarette lighter and ashtray
Cup holder
Anti-theft protection
Hot and cool box
Fuel control dial
7" (18 cm) LCD colour monitor panel
Engine speed (RPM) control dial
Hydrostatic 2-speed travel system with manual or automatic shift
Automatic rear window defroster
4 operating modes & 4 working modes
Radio-ready and remote radio ON/OFF switch
12 V power socket
Serial communication port for laptop PC interface
Adjustable PPC wrist control levers for arm, boom, bucket and swing, with sliding proportional control for attachments, auxiliary hydraulic buttons and one-touch power boost
USB port & auxiliary input
Diesel particulate filter regeneration switch
Tool storage area
Travel pedals and hand levers
Master key
Safety
Boom and arm cylinder safety valves
Overload warning device
Large handrail and step
Rotating beacon
Rear view camera
Punched metal anti-slip plates
Hydraulic safety lock lever
Safety glass
Hammer for emergency escape
Right and left rearview mirrors
Emergency engine stop and hydraulic pump control switches
Engine overheat and restart prevention system
Parking brake and cab swing lock pin
Reinforced cast steel pivot points
Upperstructure maintenance compartment doors and lockable fuel cap
Battery cut-off switch
Halogen work lights (2 front frame, 4 front cab-mounted, 2 rear cab-mounted, 2 boom-mounted and 1 rear side)
Mirror on counterweight
Other
Mono boom DX140LC-3 & DX160LC-3: 4600 mm – arm: 2500 mm
Counterweight: 2200 kg
Auto shut-off fuel filler pump
Double element air cleaner
Fuel pre-filter with water separator sensor
Dust screen for radiator/oil cooler
Separated engine hoods with gas spring. DPF hood screwed & protected
Self-diagnostic function
Battery (2 x 12 V, 100 Ah), alternator (24 V, 80 A)
Electric horn
Remote greasing for swing circle and workgroup pivot points
Guards for boom lights
Undercarriage
Fixed undercarriage DX140LC-3: 2590 mm / DX160LC-3: 2800 mm
Hydraulic track adjuster
Normal track guards
Greased and sealed track links
600 mm triple grouser shoe

✱ Optional equipment

Cab & Interior
MP3/USB radio or MP3/USB radio with CD player
Safety
FOGS cab - top and front cab guards (ISO 10262)
Front window upper and lower guards
Side view camera
Other
Two-piece boom: 4980 mm with 2100 or 2500 mm arm
Mono-boom arms: 2100 mm or 3000 mm
Doosan buckets: full range of GP, HD & Rock buckets
Doosan breaker: DXB100H and Doosan quick-couplers
Hydraulic piping for crusher, quick coupler, clamshell, tilting and rotating buckets
Additional filter for breaker piping
Floating boom function
Wiper for lower front window
Double pump flow
Water separator with heater
Engine coolant heater
Plug heater
Additional 12 V power socket
Straight travel pedal
Telescopic rotating beacon
Bio oil
Automatic lubrication system
Microphone
Alarm for travel & swing
Alarm for travel
Undercarriage
Narrow undercarriage DX160LC-3: 2590 mm
DX140LC-3: 500 & 700 mm triple grouser shoe, 500 mm rubber pads
DX140LC-3: Dozer blade 2490, 2590 & 2690 mm
DX160LC-3: Dozer blade 2700, 2800, 2900, 3000 & 3100 mm. Not available on high track or narrow version.
DX160LC-3: 500, 700, 800 & 900 mm triple grouser shoe
High track
DX140LC-3: Rubber pads 500 mm

High track (on DX160LC-3)
Ideal in forestry, recycling and demolition due to its higher ground clearance (15 cm).

Rubber pads (on DX140LC-3)
Reduce noise and vibrations and help minimize damage on asphalt, pavement or any easily damaged surfaces.

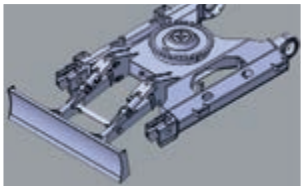

Dozer blade
For dozing and working on sloped terrains. It also increases stability when lifting.

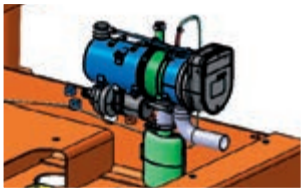

Engine coolant heater
Improves start-up ability in extremely cold conditions by heating coolant and fuel.

Doosan buckets
A range of dependable new Doosan buckets is available to cover several applications.

Doosan breakers and quick-couplers
Doosan provides the tough, reliable equipment you need for demolition work.

Some of these options may be standard in some markets. Some of these options may not be available for certain markets. Please check with your local DOOSAN dealer for more information about availability or to adapt your machine to your application needs.

Doosan Infracore Construction Equipment

A partner you can trust

Finance your ambitions

100% GENUINE PARTS
Totally Doosan

www.doosanequipment.eu

Financial Solutions

Doosan Infracore Financial Services (DI FS) is specialised in creating financing solutions to meet a wide variety of needs.
Contact your local dealer for more information.

Always a dealer near you

Our well-developed dealer network has the knowledge and experience to take the best care of our Doosan customers. No matter where you are, you'll get the service you expect - and can rely on!

Parts & Service

- Complete parts & service support for all Doosan products
- Highest quality genuine parts
- Large, dedicated staff of factory-trained aftermarket professionals in the field

Specifications and design are subject to change without notice. Pictures of Doosan products may show other than standard equipment.

DOOSAN

www.doosanequipment.eu

©2013 DOOSAN D 4401151-EN (07-13)

Doosan Infracore Construction Equipment - Drève Richelle 167 - B-1410 Waterloo, Belgium