Bobcat

One Tough Animal

COMPACT WHEEL LOADERS

L85, L100

Europe

ONE TOUGH ANIMAL

OUR MISSION

We empower operators to accomplish more while working in the toughest conditions and tightest situations. When our customers have the will, we provide the way.

INTRODUCTION

BOBCAT'S HISTORY

In 1958, the Melroe Manufacturing Company introduced a compact front-end loader that quickly evolved into the M400, the world's first true skid-steer loader. The company soon adopted what became the world-famous "Bobcat" brand, and its success paved the way for the global compact equipment industry we see today.

BUILT IN EUROPE. MADE FOR EUROPE.

Designed and manufactured in Europe, Bobcat compact wheel loaders are built around the needs of demanding European customers. From performance and comfort to attachments and service support, every detail is shaped for local applications, working conditions and expectations.

BOBCAT TODAY

With over 60 years of manufacturing experience and a commitment to ongoing innovation, Bobcat has delivered millions of machines to the market. Known for their high performance, reliability, and unparalleled comfort, the diverse lineup caters to various applications. Whether it's landscaping, snow removal, construction, demolition, or roadwork, Bobcat machines empower users to accomplish more.

DESIGNED AROUND THE WAY YOU WORK

SMART, FLEXIBLE, AND PACKED WITH POWER

The new Bobcat compact wheel loaders deliver modern jobsite capability with more flexible configuration, including different speed limit options, buckets matched to the model and a wide range of quick-connect attachments — with options tailored to the work you actually do.

ROCK-SOLID PERFORMANCE

Get more done with up to 55.2 kW / 74 hp, strong breakout force and excellent stability. Tackle tough terrain with confidence, plus hydraulic flow up to 103.5 l/min with High Flow.

INTUITIVE OPERATION

Get to work quickly with intuitive controls and improved ergonomics. Automatic parking brake, slope assist and Return to Dig help you work confidently from the first shift.

FIRST-CLASS COMFORT

Comfort-focused cab and controls with configuration-based upgrades: heated adjustable seat, AC, improved storage/ USB, and an advanced 5” display with integrated settings and camera support.

AS TOUGH AS YOU ARE

Robust design with protection options (steel plates, bottom protection), practical refuelling support and a reversible fan for demanding environments. Built with proven Bobcat reliability.

PERFORMANCE

ONE MACHINE, MULTIPLE SPEEDS

Choose flexibility from the get go — opt for the travel speed that fits your market and work style: upon ordering, you can choose a 20, 30 or 40 km/h top speed limit.

SMOOTHER TRAVEL

The Auto Ride Control functionality shields you from bumps and helps keep attachments stable on uneven terrain, and increase confidence during travel, even at higher speeds. It's easy to use (with a dedicated button) and smarter in motion, disengaging under 3 kph and re-engaging as speed rises.

POWER AND STABILITY WHERE YOU NEED IT

Featuring Z-kinematics — a lift arm design that delivers high breakout force for confident digging and loading, while keeping the machine stable when handling heavy loads.

HOLD THE LOAD. REPEAT THE MOVE

Return to Dig lets you store your desired bucket position and recall it with a joystick button for faster, consistent material loading, speeding up repetitive moves and making the machine feel more predictable.

STEP INSIDE

STEADY AND ALWAYS IN CONTROL

Confidence comes from feeling in control and keeping things steady, especially on uneven ground, in tight spaces and during repeated loading cycles.

Visibility-focused design elements also help operators place loads precisely and manoeuvre with confidence: improved sight lines, strong lighting, and the option of a rear-view camera support awareness across the working area.

ALL-DAY COMFORT

From quick jobs to full days of loading, the refreshed cab and ergonomic controls help reduce fatigue and keep operators comfortable throughout the shift.

CONTROLS WITHIN REACH

Intuitive joystick controls put key functions close at hand. Depending on the configuration, a heated adjustable seat, two-way steering column and air conditioning add extra comfort.

STAY CONNECTED

Practical storage and USB charging keep essentials close. The display shows key machine information, while the premium 5-inch screen adds integrated settings and rear-view camera support.

BUILT TOUGH

PROTECTED FOR THE JOB

Bobcat compact wheel loaders combine robust design with protection options that help keep your machine ready for work. Steel plates and an optional bottom protection kit guard critical areas, while a fuel refill pump adds everyday convenience.

In dusty conditions, a reversible cooling fan helps maintain cooling efficiency. Proven Bobcat design and trusted components deliver durability you can rely on.

RELIABLE SUPPORT

Ownership is easier when support is straightforward. With Bobcat, you'll benefit from an established dealer network and a single service point for both the machine and the engine. And with Bobcat Machine IQ telematics, you can monitor key machine information remotely, including the ability to enable or disable the engine from a distance for added control and peace of mind.

A MACHINE THAT WORKS WITH YOU. A BRAND THAT STANDS BEHIND YOU.

Buying a Bobcat isn't just a purchase — it's peace of mind. From day one to the final hour, we're with you.

BOBCAT WARRANTY

COVERAGE THAT HAS YOUR BACK

Every new Bobcat comes with built-in confidence — and the option to go even further.

- 2 years / 2 000 hours of standard coverage
- Protection Plus: Extend your warranty up to 5 years / 6 000 hours for your peace of mind

MACHINE IQ

STAY IN CONTROL — EVEN FROM A DISTANCE

Track your machine's performance, location, fuel level, and health in real time from your phone or computer thanks to Machine IQ, with a Standard plan now free with new machines.

ATTACHMENTS

ONE MACHINE, MANY JOBS

Your Bobcat is more than a machine — it's your all-in-one solution. From loading to drilling to cleanup, swap tasks in seconds.

- Pre-selected kits for easier setup
- Quick changes with Bob-Tach™ or common industry interface (CII)

TRAINING VIDEOS: QUICK TIPS, REAL RESULTS

SERVICE

SERVICE THAT KEEPS YOU MOVING

Bobcat-authorised service means your machine gets expert care — fast. Regular checks, genuine parts, minimal downtime. And support that's always close by.

GENUINE PARTS

GUARANTEED PERFORMANCE.

Perfect fit, lasting performance, longer machine life. With genuine Bobcat parts, every start is reliable, and every action precise.

- Wide partner network
- 96% of parts delivered within 48 hours

BOBCAT CERTIFIED

BACKED TO HOLD VALUE

A well-maintained Bobcat keeps its edge — and its worth. With Bobcat Certified, your machine stays recognised, trusted, and ready for the next owner.

BOBCAT. RELIABILITY THAT LASTS LONGER.

CHOOSE YOUR ANIMAL

L85

MADE FOR TIGHTER SPACES

With its 0.8 m³ bucket, compact dimensions and 50.7 kW / 68 hp engine, the L85 is a strong choice for tighter sites and everyday loading work. It combines easy manoeuvrability with familiar Bobcat performance, comfort and versatility.

L100

MADE TO MOVE MORE

With a 1.0 m³ bucket and 55.2 kW / 75 hp engine, the L100 is designed for jobs where moving more material matters. It offers the same proven Bobcat build, technology and ease of operation, with added capacity for larger loading tasks.

L85	**0.8 m³** BUCKET CAPACITY	**103.5 l/min** HIGH FLOW	**3 142 kg** TIPPING LOAD
L100	**1.0 m³** BUCKET CAPACITY	**103.5 l/min** HIGH FLOW	**3 752 kg** TIPPING LOAD

STANDARD EQUIPMENT & OPTIONS

	L85	L100
PERFORMANCE		
Advanced Attachment Controls	•	•
Automatic Ride Control	•	•
High Flow	•	•
Standard Flow	✓	✓
Power Quick-Tach™	✓	✓
Power Bob-Tach™	•	•
ROAD		
Brakes standard	✓	✓
Brakes—German homologation	•	•
Road package	•	✓
Speed 20 km/h	✓	✓
Speed 30 km/h	•	•
Speed 40 km/h	•	•
CAB		
Rear view heated mirrors	•	•
12V charging port	✓	✓
USB-A + USB-C charging port	✓	✓
4.3-inch display	✓	✓
5-inch display with jog shuttle	•	•
Vinyl suspension seat	✓	✓
Cloth suspension seat	•	•
Cloth heated air ride seat w/LH armrest	•	•
Fire extinguisher	•	•
Front window sun shade	•	•
Heater	✓	✓
Air conditioning	•	•
Key ignition with password	✓	✓
Radio ready	•	•
Radio FM/AM/DAB+/phone ready	✓	✓
Lockable storage compartment under seat	•	•
USB charging port	✓	✓
WHEELS		
Wheels 335/80 R18	✓	–
Wheels 405/70 R18	•	–
Wheels 335/80 R20	–	✓
Wheels 405/70 R20	•	•
LIGHTS & BEACON		
Beacon	•	•
Road lights halogen	✓	✓
Road lights LED	•	•
Work lights halogen	✓	✓
Work lights LED	•	•
MISCELLANEOUS		
Backup alarm	•	•
Machine IQ (telematics)	✓	✓
Bucket level indicator	•	•
Rear-view camera	•	•

PERSONALIZE YOUR MACHINE

Start with solid performance and tailor your machine to the task. The updated range comes well equipped as standard, with additional features and application specific options available.

Beacon

Premium heated seat

Air conditioning (HVAC)

Rear-view camera

Road lights LED

Work lights LED

Speed 40 km/h

Automatic Ride Control

High Flow

Advanced attachment controls

• = option ✓ = standard – = not available or not compatible

MULTI-TOOL CARRIER

ATTACHMENTS		L85	L100
1	Angle broom	•	•
2	Auger	•	•
3	Bucket, combination	•	•
4	Bucket, general purpose (GP)	•	•
5	Bucket, light material	•	•
6	Bucket, mixing	•	•
7	Pallet forks	•	•
8	Pressure washer	•	•
9	Quick-Tach™ to Bob-Tach™ adapter	•	•
10	Salt & sand spreader	•	•
11	Snow blade	•	•
12	Snow blower	•	•
13	Snow pusher	•	•
14	Snow V-blade	•	•
15	Soil & asphalt apreader	•	•
16	Sweeper	•	•
17	Sweeper, multipurpose	•	•

• = compatibile – = not compatibile

BOBCAT ATTACHMENTS

Get more versatility and efficiency with Bobcat attachments and implements.

- The largest choice of attachments in the industry.
- Match performance to your Bobcat machine.
- Work harder with stronger components and construction.
- Rest easy with the 12-month warranty on every genuine Bobcat attachment.

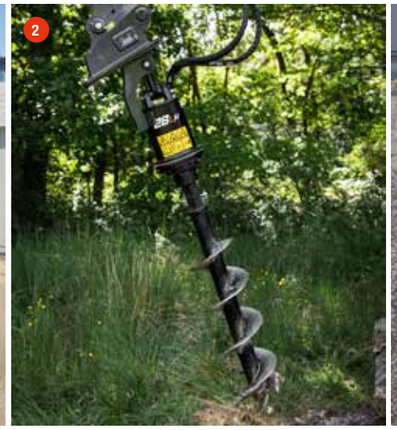

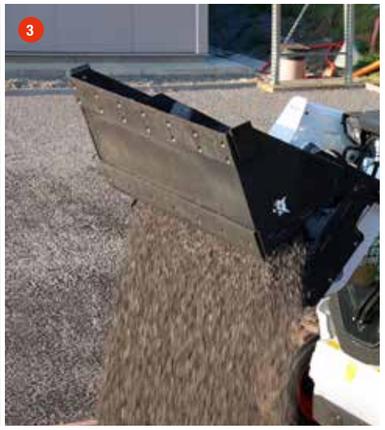

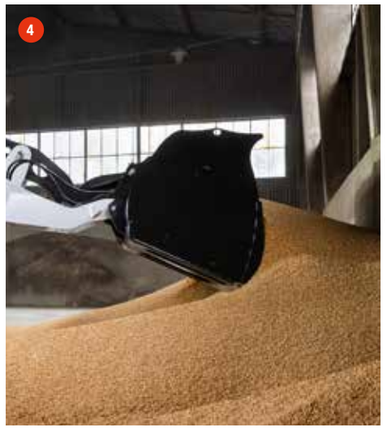

BOBCAT OFFERS MORE ATTACHMENTS FOR YOUR NEEDS. CHECK OUT "BOBCAT ATTACHMENT CATALOG" FROM YOUR DEALER OR DOWNLOAD THE 'ONE TOUGH WORLD' APP VIA QR CODE.

GET IT ON Google Play

Download on the App Store

SPECIFICATIONS

SPECIFICATIONS			
	UNITS	L85	L100
WEIGHTS			
Operating weight, standard (ISO 6016)	kg	4 796	5 258
Shipping weight, standard (ISO 6016)	kg	4 380	4 792
Max. static axle load	kg	11 500	
Max. dynamic axle load (at 40 km/h)	kg	5 500	
ENGINE			
Model		2.4 l Bobcat Engine	
Compliance		Stage V	
Cooling		Liquid	
Fuel		Diesel	
Power at 2 600 RPM (ISO 14396)	kW (hp)	50.7 (68)	55.2 (75)
HYDRAULIC SYSTEM			
System relief @ quick couplers	MPa	20.5 / 23.5	
Auxiliary standard flow	l/min	75.40	
Auxiliary high-flow	l/min	103.5	
PERFORMANCE WITH BUCKET			
Standard bucket capacity	m³	0.8	1
Bucket range	m³	0.8 – 1.2	0.8 – 1.5
Tipping load, straight (ISO 14397-1) with Quick-Tach™	kg	3 142 – 3 715	3 752 – 4 054
Tipping load, straight (ISO 14397-1) with Bob-Tach™	kg	2 862 – 3 384	3 422 – 3 697
Tipping load, articulated at 40° (ISO 14397-1) with Quick-Tach™	kg	2 543 – 3 007	3 052 – 3 297
Tipping load, articulated at 40° (ISO 14397-1) with Bob-Tach™	kg	2 330 – 2 755	2 769 – 2 991
Rated operating capacity (ISO 14397-1) with Quick-Tach™	kg	1 571 – 1 857	1 876 – 2 027
Rated operating capacity (ISO 14397-1) with Bob-Tach™	kg	1 431 – 1 692	1 711 – 1 849
Lift breakout force (ISO 14397-2)	kg	4 588	5 551
Lift capacity (ISO 14397-2)	kg	2 446	2 828
PERFORMANCE WITH PALLET FORK			
Tipping load, straight (ISO 14397-1)	kg	2 450 – 2 884	2 904 – 3 128
Tipping load, articulated at 40° (ISO 14397-1)	kg	2 011 – 2 367	2 397 – 2 582
DRIVE SYSTEM			
Main drive		Proportionally regulated hydrostatic motor	
Transmission		Hydrostatic with electronic regulation	
CONTROLS			
Vehicle steering		Machine articulation via hydraulic steering with steering wheel	
Travel direction		Travel direction switch (F-N-R) on joystick. Drive pedal in work and travel mode	
Machine hydraulics		Dual axis joystick for lift and tilt and auxiliary	
Vehicle braking		Combination of integrated 6 wet brake discs in rear axle with hydrostatic braking effect provision	

Certain specification(s) are based on engineering calculations and are not actual measurements. Specification(s) are provided for comparison purposes only and are subject to change without notice. Specification(s) for your individual Bobcat equipment will vary based on normal variations in design, manufacturing, operating conditions, and other factors. Pictures of Bobcat units may show other than standard equipment.

DIMENSIONS — BUCKET

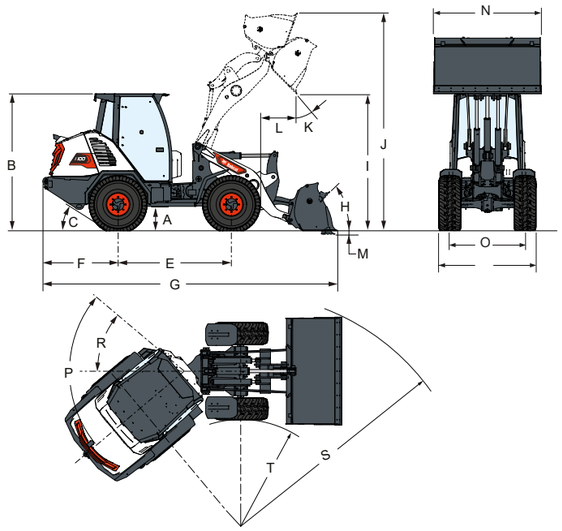

DIMENSIONS — PALLET FORK

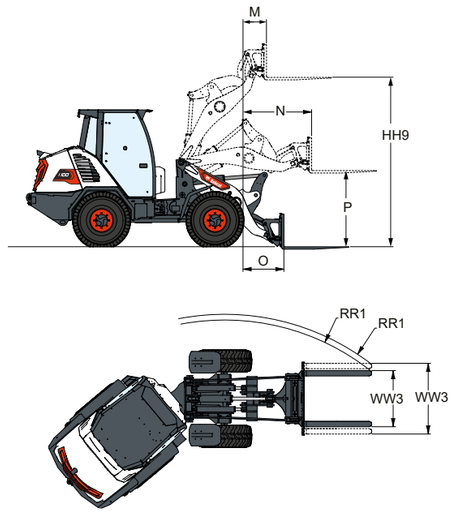

DIMENSIONS — BUCKET		
	L85	L100
A	2 498	2 535
B	427	452
C	2 100	
D	5 476	5 463
E	686	671
F	100	63
G	2 508	2 534
I	3 250	3 287
J	33.3°	34.9°
K	4 280.4	4 329.2
L	1 986	1 982
M	1 900	2 000
N	1 393	1 400
O	1 800	1 807
P	40°	
Q	45°	

Unit: mm

DIMENSIONS — PALLET FORK		
	L85	L100
R	6 003	5 973
RR1	4 262 – 4 473	
S	796	740
T	1 278	1 252
V	1 374	1 411
W	3 100	3 085
WW3	774 – 1 314	
X	442	416

FINANCING OPTIONS

24, 36, OR 48-MONTH FINANCING*

Take advantage of 24, 36, or 48-month financing programs starting from **0% interest** and improve your cash flow. Ask your dealer for the financing offers available.

340 MACHINES / 150 ATTACHMENT FAMILIES / 1 TOUGH ANIMAL

SKID-STEER LOADERS

COMPACT TRACK LOADERS

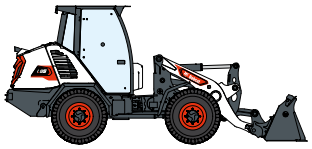

COMPACT WHEEL LOADERS

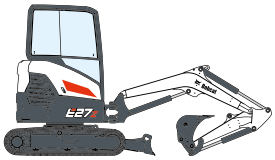

COMPACT EXCAVATORS

FORKLIFTS

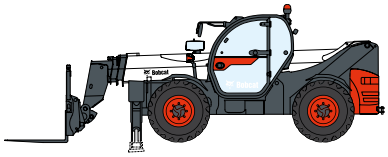

TELEHANDLERS

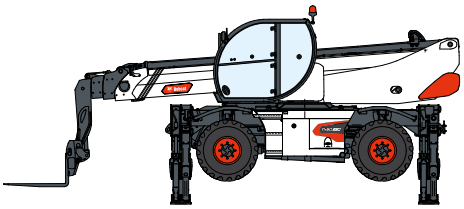

ROTARY TELEHANDLERS

WAREHOUSE EQUIPMENT

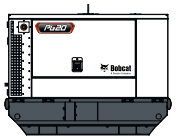

GENERATORS

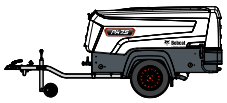

AIR COMPRESSORS

LIGHT COMPACTION EQUIPMENT

COMPACT TRACTORS

MINI TRACK LOADERS

MOWERS

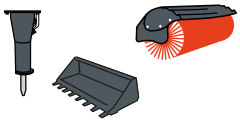

ATTACHMENTS

Bobcat

DOOSAN

Bobcat is a Doosan Company. Doosan is a global leader in construction equipment, power & water solutions, engines, and engineering proudly serving customers and communities for more than a century. | Bobcat and the Bobcat logo are registered trademarks of Bobcat Company in the United States and various other countries. ©2026 Bobcat Company. All Rights Reserved.

*Financing options may vary by country and dealer. Always ask your dealer about currently available financing options. Terms and conditions may apply.

Doosan Bobcat EMEA, U Kodetky 1810, 263 12 Dobříš, Czech Republic

www.bobcat.com

©2026 BOBCAT B4502385-EN (09-26)